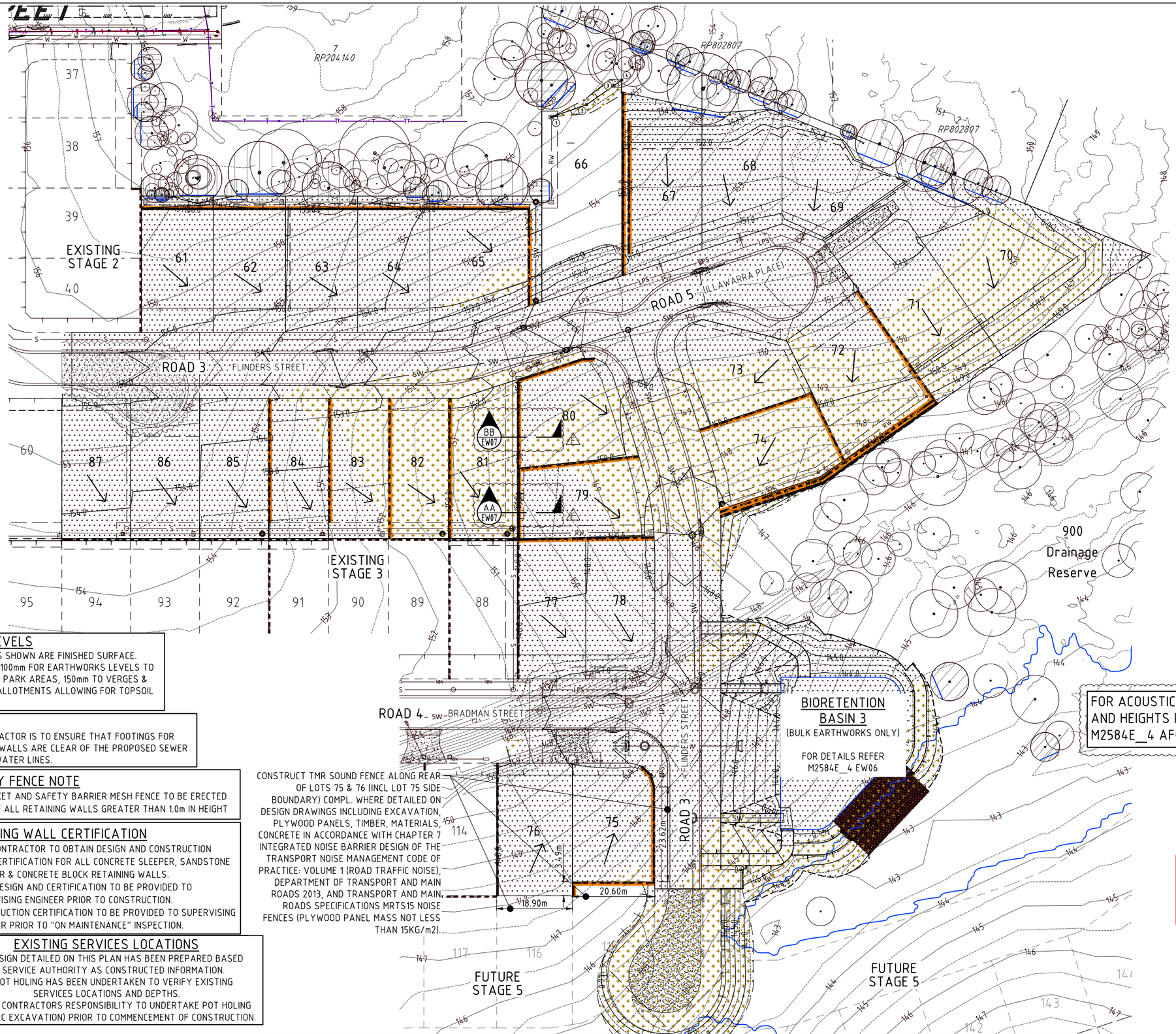

LEGEND:

- EXISTING CONTOURS — 32
- FINISHED CONTOURS — 32
- PROPOSED KERB AND CHANNEL
- SPOT LEVELS (#19.62 DENOTES NATURAL SURFACE LEVEL) — 19.05
- PROPOSED FILL
- PROPOSED CUT
- PROPOSED CONCRETE SLEEPER RETAINING WALL
- PROPOSED "A GRADE" SANDSTONE RETAINING WALL
- BATTER BETWEEN ALLOTMENTS (at 1 in 2 max.)
- BATTER TO ALLOTMENT
- PROPOSED SEWERAGE LINE — S
- PROPOSED STORMWATER LINE — SW
- PROPOSED ROOFWATER LINE — RW

TREE LEGEND

- TREES TO BE RETAINED AND PROTECTED
- TREES TO BE RETAINED AND REQUIRES THE SUPERVISION OF ANY EXCAVATION OR SERVICES WORKS WITHIN THE HATCHED PROTECTION ZONE BY AN ARBORIST ON SITE.

TPZ
Tree Protection Zone
All vegetation to be protected in accordance with AS4970 - Protection of Trees on Development Sites & any conditions of approval.

FOR NOTES AND DETAILS REFER DWG No.M2584E_4 EW05 & EW07

PRIOR TO COMMENCEMENT OF WORKS REFER TO VEGETATION MANAGEMENT PLAN.

FOR ACOUSTIC FENCE LOCATION AND HEIGHTS REFER DWG No. M2584E_4 AF01

FOR MAINTENANCE OF EXISTING VEGETATION AND REMOVAL, WHERE PERMITTED REFER TO THE APPROVED VEGETATION MANAGEMENT PLAN

EPZ
Environmental Protection Zone to be clearly demarcated onsite and protected in accordance with the conditions of approval.

THIS APPROVAL SHOULD NOT BE TAKEN TO CONSTITUTE PERMISSION TO ENTER NEIGHBOURING PROPERTIES TO CONSTRUCT (INCLUDING ASSOCIATED WORKS SUCH AS DRAINAGE AND EXCAVATION) ANY BUILT TO BOUNDARY WALL OR FENCES. PERMISSION MUST BE OBTAINED FROM RELEVANT PROPERTY OWNERS.

Fire Ant Movement Controls

To prevent the spread of fire ants, the Queensland Government has implemented controls that apply to individuals and commercial operators, to restrict the movement of materials that could carry fire ants including soil, turf, potted plants, mulch, baled hay or straw, animal manures, mining or quarry products.

Penalties apply for non-compliance with the movement controls. if you are unsure of your obligations under the Biosecurity Act 2014 contact the relevant Queensland State Government Department.

SPOT LEVELS

ALL LEVELS SHOWN ARE FINISHED SURFACE. SUBTRACT 100mm FOR EARTHWORKS LEVELS TO BATTERS & PARK AREAS, 150mm TO VERGES & 250mm TO ALLOTMENTS ALLOWING FOR TOPSOIL THICKNESS.

NOTE:

THE CONTRACTOR IS TO ENSURE THAT FOOTINGS FOR RETAINING WALLS ARE CLEAR OF THE PROPOSED SEWER AND ROOFWATER LINES.

SAFETY FENCE NOTE

STAR PICKET AND SAFETY BARRIER MESH FENCE TO BE ERECTED ON TOP OF ALL RETAINING WALLS GREATER THAN 1.0m IN HEIGHT

RETAINING WALL CERTIFICATION

1. CIVIL CONTRACTOR TO OBTAIN DESIGN AND CONSTRUCTION RPEQ CERTIFICATION FOR ALL CONCRETE SLEEPER, SANDSTONE BOULDER & CONCRETE BLOCK RETAINING WALLS.
2. WALL DESIGN AND CERTIFICATION TO BE PROVIDED TO SUPERVISING ENGINEER PRIOR TO CONSTRUCTION.
3. CONSTRUCTION CERTIFICATION TO BE PROVIDED TO SUPERVISING ENGINEER PRIOR TO "ON MAINTENANCE" INSPECTION.

EXISTING SERVICES LOCATIONS

THE DESIGN DETAILED ON THIS PLAN HAS BEEN PREPARED BASED ON SERVICE AUTHORITY AS CONSTRUCTED INFORMATION. NO POT HOLING HAS BEEN UNDERTAKEN TO VERIFY EXISTING SERVICES LOCATIONS AND DEPTHS. IT IS THE CONTRACTORS RESPONSIBILITY TO UNDERTAKE POT HOLING (HYDROVAC EXCAVATION) PRIOR TO COMMENCEMENT OF CONSTRUCTION.

DIAL BEFORE YOU DIG www.1100.com.au
The Essential First Step

URBAN CONSULTANTS
BRISBANE - SUNSHINE COAST - CENTRAL QLD
BRISBANE
JFP House - 76 Ernest Street,
South Brisbane Qld 4101
P 07 3012 0100 W www.jfp.com.au
JFP URBAN CONSULTANTS PTY. LTD. A.C.N. 050 414 045
PLANNERS
URBAN DESIGNERS
SURVEYORS
ENGINEERS
LANDSCAPE ARCHITECTS

NORTH: N

SCALE: 1:500 A1
THIS SCALE SHOWN IS ORIGINAL DRAWING SCALE
0 5 10 15 20 25 (A1) 1:500 50 Metres
(A3) 1:1000
DO NOT SCALE FROM THIS DRAWING - USE ONLY DIMENSIONS PROVIDED - IF IN DOUBT PLEASE ENQUIRE

APPROVED
FOR AND ON BEHALF OF JFP URBAN CONSULTANTS PTY LTD
☐ T.M.KINNEY RPEQ 5087 ☐ A.FRASER RPEQ 5691 ☐ J.PAPPAS RPEQ 6086
☐ S.MARSH RPEQ 8068 ☑ H.WATSON RPEQ 6200

DESIGNED	CDV
DRAWN	WN
CHECKED	PNH
DATUM: AHD	

ISSUE:

ISSUE:	DETAILS:	DATE:	INIT:
F	INFORMATION REQUEST AMENDMENTS	03/04/23	CDV
E	LOT 75 RET WALL & ACOUSTIC FENCE DETAILS ADDED	27/02/23	CDV
D	ELECT TRANSFORMER & BIORETENTION BASIN ADDED	10/02/23	CDV
C	EARTHWORKS AMENDED	01/08/22	CDV
B	EARTHWORKS AMENDED	01/07/22	CDV
A	ISSUE FOR OPERATIONAL WORKS APPROVAL	22/07/22	CDV

TITLE:
EARTHWORKS LAYOUT PLAN

DFC (PROJECT MANAGEMENT) PTY LTD

'ARCHERS WAY' ESTATE - STAGE 4
AT 22-80 CASH STREET, D'AGUILAR

DENNIS FAMILY CORPORATION

DETAILS:
JOB NO: M2584E_4
PLAN: EW01 ISSUE: F
MORETON BAY REGIONAL COUNCIL REF: DA/38032/2019/V3VR
FILE NAME: EARTHWORKS.DWG

COPYRIGHT © 2011 JFP URBAN CONSULTANTS PTY LTD THIS DOCUMENT MAY NOT BE COPIED OR TRANSMITTED IN ANY FORM OR BY ANY MEANS IN PART OR IN WHOLE WITHOUT THE WRITTEN PERMISSION OF JFP URBAN CONSULTANTS PTY LTD.

Document Set ID: 66908357
Version: 1, Version Date: 09/05/2023
Moreton Bay Regional Council
Approved subject to conditions of Decision Notice DA/2023/0531
09/05/2023

NOTE:
THE CONTRACTOR IS TO ENSURE THAT FOOTINGS FOR RETAINING WALLS ARE CLEAR OF THE PROPOSED SEWER AND ROOFWATER LINES.

SPOT LEVELS
ALL LEVELS SHOWN ARE FINISHED SURFACE. SUBTRACT 100mm FOR EARTHWORKS LEVELS TO BATTERS & PARK AREAS, 150mm TO VERGES & 250mm TO ALLOTMENTS ALLOWING FOR TOPSOIL THICKNESS.

EXISTING SERVICES LOCATIONS
THE DESIGN DETAILED ON THIS PLAN HAS BEEN PREPARED BASED ON SERVICE AUTHORITY AS CONSTRUCTED INFORMATION. NO POT HOLING HAS BEEN UNDERTAKEN TO VERIFY EXISTING SERVICES LOCATIONS AND DEPTHS. IT IS THE CONTRACTORS RESPONSIBILITY TO UNDERTAKE POT HOLING (HYDROVAC EXCAVATION) PRIOR TO COMMENCEMENT OF CONSTRUCTION.

EPZ
Environmental Protection Zone to be clearly demarcated onsite and protected in accordance with the conditions of approval.

Fire Ant Movement Controls

To prevent the spread of fire ants, the Queensland Government has implemented controls that apply to individuals and commercial operators, to restrict the movement of materials that could carry fire ants including soil, turf, potted plants, mulch, baled hay or straw, animal manures, mining or quarry products.

Penalties apply for non-compliance with the movement controls. if you are unsure of your obligations under the Biosecurity Act 2014 contact the relevant Queensland State Government Department.

THIS APPROVAL SHOULD NOT BE TAKEN TO CONSTITUTE PERMISSION TO ENTER NEIGHBOURING PROPERTIES TO CONSTRUCT (INCLUDING ASSOCIATED WORKS SUCH AS DRAINAGE AND EXCAVATION) ANY BUILT TO BOUNDARY WALL OR FENCES. PERMISSION MUST BE OBTAINED FROM RELEVANT PROPERTY OWNERS.

PRIOR TO COMMENCEMENT OF WORKS REFER TO VEGETATION MANAGEMENT PLAN.

FOR MAINTENANCE OF EXISTING VEGETATION AND REMOVAL, WHERE PERMITTED REFER TO THE APPROVED VEGETATION MANAGEMENT PLAN

FOR NOTES AND DETAILS REFER DWG No.M2584E_4 EW05 & EW07

LEGEND:
- EXISTING CONTOURS — 32
- FINISHED CONTOURS — 32
- PROPOSED KERB AND CHANNEL
- SPOT LEVELS (#19.62 DENOTES NATURAL SURFACE LEVEL) — 19.62
- PROPOSED FILL
- PROPOSED CUT
- PROPOSED CONCRETE SLEEPER RETAINING WALL
- BATTER BETWEEN ALLOTMENTS (at 1 in 2 max.)
- BATTER TO ALLOTMENT
- PROPOSED SEWERAGE LINE — S
- PROPOSED STORMWATER LINE — SW
- PROPOSED ROOFWATER LINE — RW

TREE LEGEND
- TREES TO BE RETAINED AND PROTECTED
- TREES TO BE RETAINED AND REQUIRES THE SUPERVISION OF ANY EXCAVATION OR SERVICES WORKS WITHIN THE HATCHED PROTECTION ZONE BY AN ARBORIST ON SITE.

TPZ
Tree Protection Zone
All vegetation to be protected in accordance with AS4970 - Protection of Trees on Development Sites & any conditions of approval.

RETAINING WALL CERTIFICATION
1. CIVIL CONTRACTOR TO OBTAIN DESIGN AND CONSTRUCTION RPEQ CERTIFICATION FOR ALL CONCRETE SLEEPER, SANDSTONE BOULDER & CONCRETE BLOCK RETAINING WALLS.
2. WALL DESIGN AND CERTIFICATION TO BE PROVIDED TO SUPERVISING ENGINEER PRIOR TO CONSTRUCTION.
3. CONSTRUCTION CERTIFICATION TO BE PROVIDED TO SUPERVISING ENGINEER PRIOR TO "ON MAINTENANCE" INSPECTION.

SAFETY FENCE NOTE
STAR PICKET AND SAFETY BARRIER MESH FENCE TO BE ERECTED ON TOP OF ALL RETAINING WALLS GREATER THAN 1.0m IN HEIGHT

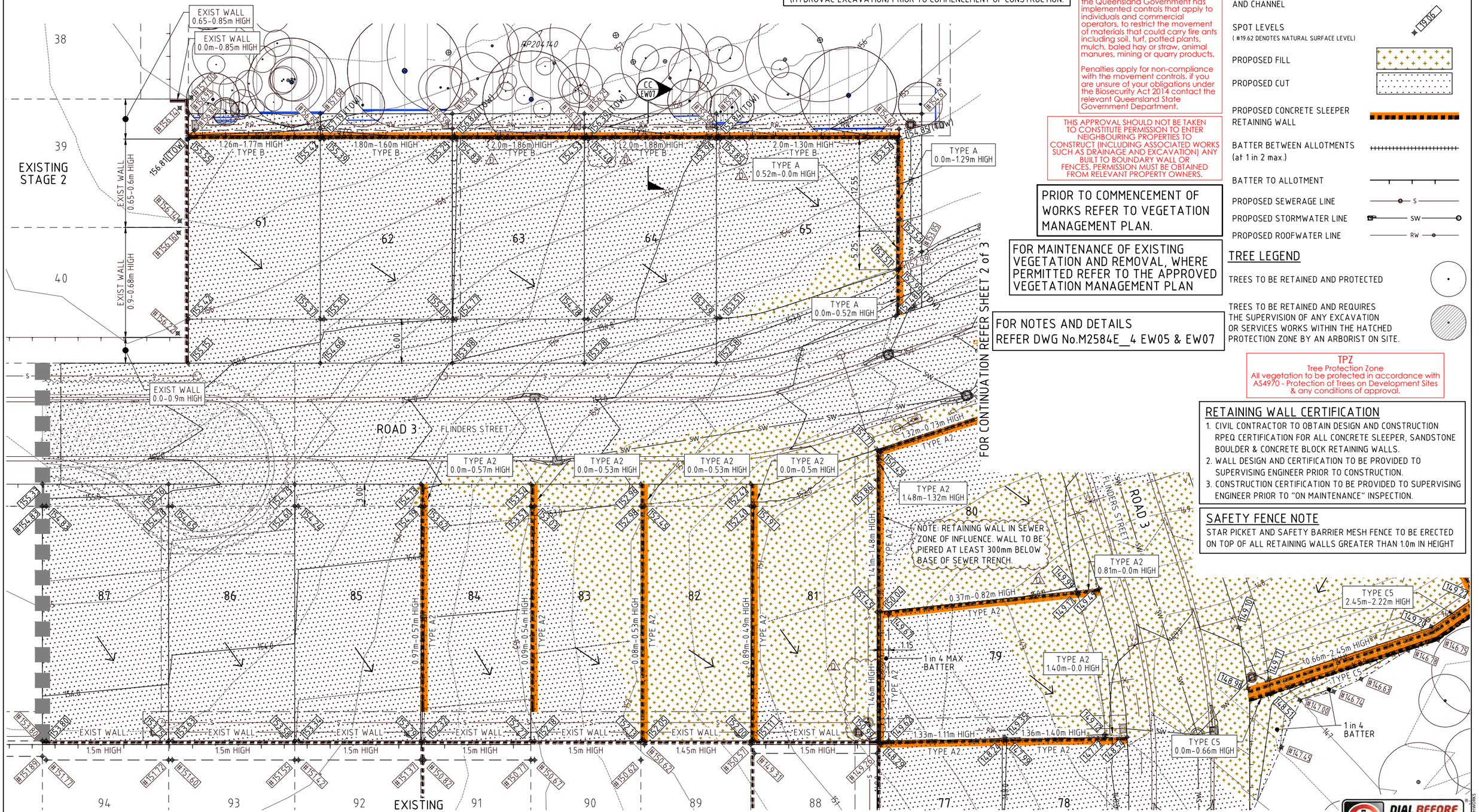

JFP URBAN CONSULTANTS
BRISBANE - SUNSHINE COAST - CENTRAL QLD
BRISBANE
JFP House - 76 Ernest Street,
South Brisbane Qld 4101
P 07 3012 0100 W www.jfp.com.au
JFP URBAN CONSULTANTS PTY. LTD. A.C.N. 050 414 045
PLANNERS
URBAN DESIGNERS
SURVEYORS
ENGINEERS
LANDSCAPE ARCHITECTS

NORTH: N

SCALE: 1:250 A1
THIS SCALE SHOWN IS ORIGINAL DRAWING SCALE
0 2.5 5 7.5 10 12.5 (A1) 1:250 25 Metres
(A3) 1:500
DO NOT SCALE FROM THIS DRAWING - USE ONLY DIMENSIONS PROVIDED - IF IN DOUBT PLEASE ENQUIRE

APPROVED
FOR AND ON BEHALF OF JFP URBAN CONSULTANTS PTY LTD
T.M.KINNEY RPEQ 5087 | A.FRASER RPEQ 5691 | J.PAPPAS RPEQ 6086
S.MARSH RPEQ 8068 | H.WATSON RPEQ 6200

DESIGNED	CDV
DRAWN	WN
CHECKED	PNH
DATUM: AHD	

ISSUE:

ISSUE	DETAILS	DATE	INIT
D	INFORMATION REQUEST AMENDMENTS	03/04/23	CDV
C	NOTES AMENDED	28/02/23	CDV
B	EARTHWORKS AMENDED	01/07/22	CDV
A	ISSUE FOR OPERATIONAL WORKS APPROVAL	22/07/22	CDV

TITLE:
EARTHWORKS LAYOUT DETAILS PLAN - SHEET 1 OF 3
DFC (PROJECT MANAGEMENT) PTY LTD
'ARCHERS WAY' ESTATE - STAGE 4
AT 22-80 CASH STREET, D'AGUILAR

DENNIS FAMILY CORPORATION

DETAILS:
JOB NO: M2584E_4
PLAN: EW02 ISSUE: D
MORETON BAY REGIONAL COUNCIL REF: DA/38032/2019/V3VR
FILE NAME: EARTHWORKS.DWG

COPYRIGHT © 2011 JFP URBAN CONSULTANTS PTY LTD THIS DOCUMENT MAY NOT BE COPIED OR TRANSMITTED IN ANY FORM OR BY ANY MEANS IN PART OR IN WHOLE WITHOUT THE PRIOR WRITTEN CONSENT OF JFP URBAN CONSULTANTS PTY LTD.

Document Set ID: 66908359
Version: 1, Version Date: 09/05/2023
Moreton Bay Regional Council
Approved subject to conditions of Decision Notice DA/2023/0531
09/05/2023

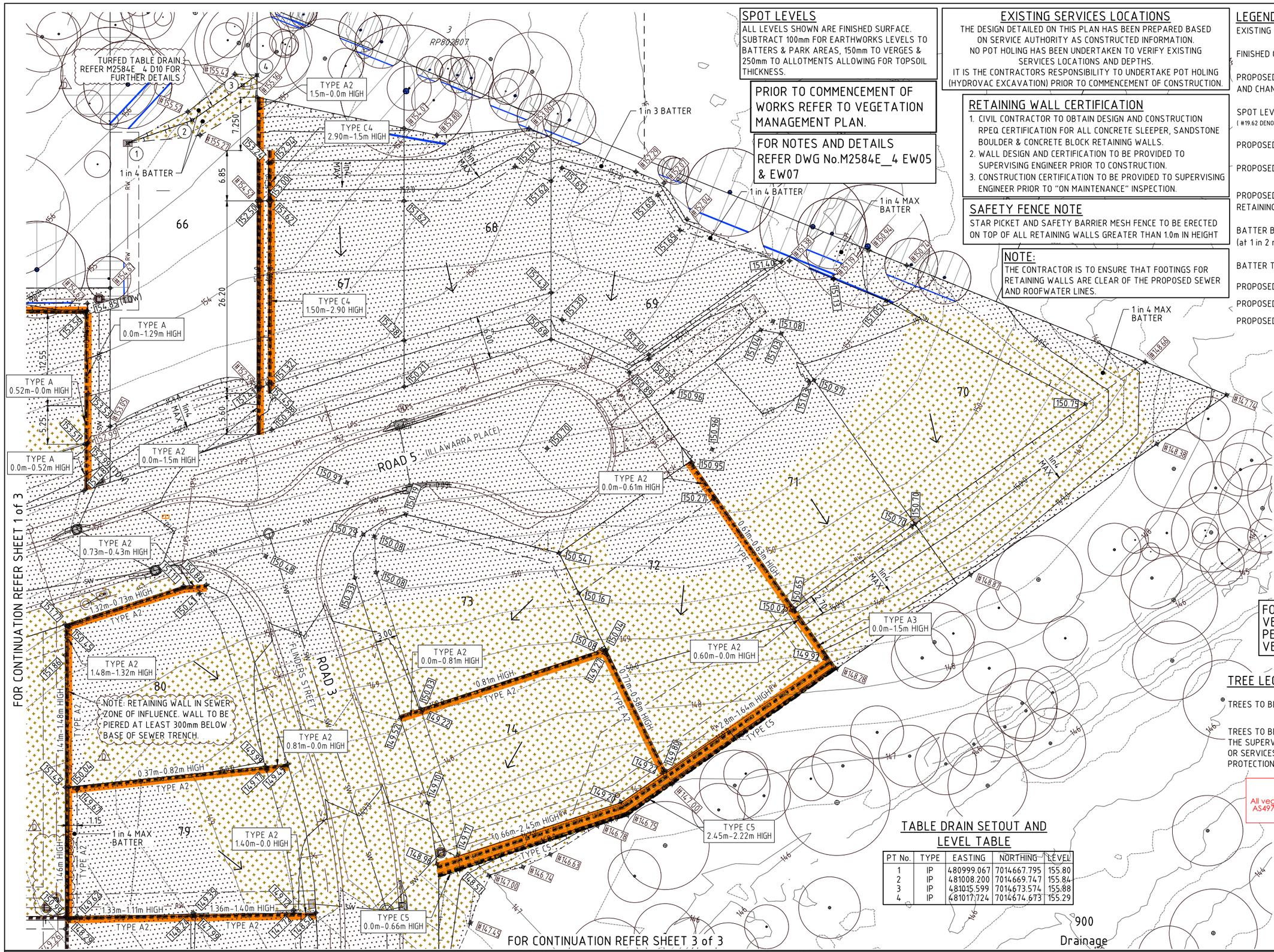

SPOT LEVELS

ALL LEVELS SHOWN ARE FINISHED SURFACE. SUBTRACT 100mm FOR EARTHWORKS LEVELS TO BATTERS & PARK AREAS, 150mm TO VERGES & 250mm TO ALLOTMENTS ALLOWING FOR TOPSOIL THICKNESS.

PRIOR TO COMMENCEMENT OF WORKS REFER TO VEGETATION MANAGEMENT PLAN.

FOR NOTES AND DETAILS REFER DWG No.M2584E_4 EW05 & EW07

EXISTING SERVICES LOCATIONS

THE DESIGN DETAILED ON THIS PLAN HAS BEEN PREPARED BASED ON SERVICE AUTHORITY AS CONSTRUCTED INFORMATION. NO POT HOLING HAS BEEN UNDERTAKEN TO VERIFY EXISTING SERVICES LOCATIONS AND DEPTHS. IT IS THE CONTRACTORS RESPONSIBILITY TO UNDERTAKE POT HOLING (HYDROVAC EXCAVATION) PRIOR TO COMMENCEMENT OF CONSTRUCTION.

RETAINING WALL CERTIFICATION

1. CIVIL CONTRACTOR TO OBTAIN DESIGN AND CONSTRUCTION RPEQ CERTIFICATION FOR ALL CONCRETE SLEEPER, SANDSTONE BOULDER & CONCRETE BLOCK RETAINING WALLS.
2. WALL DESIGN AND CERTIFICATION TO BE PROVIDED TO SUPERVISING ENGINEER PRIOR TO CONSTRUCTION.
3. CONSTRUCTION CERTIFICATION TO BE PROVIDED TO SUPERVISING ENGINEER PRIOR TO "ON MAINTENANCE" INSPECTION.

SAFETY FENCE NOTE

STAR PICKET AND SAFETY BARRIER MESH FENCE TO BE ERECTED ON TOP OF ALL RETAINING WALLS GREATER THAN 1.0m IN HEIGHT

NOTE:

THE CONTRACTOR IS TO ENSURE THAT FOOTINGS FOR RETAINING WALLS ARE CLEAR OF THE PROPOSED SEWER AND ROOFWATER LINES.

LEGEND:

- EXISTING CONTOURS — 32
- FINISHED CONTOURS — 32
- PROPOSED KERB AND CHANNEL
- SPOT LEVELS (#19.62 DENOTES NATURAL SURFACE LEVEL) — 19.06
- PROPOSED FILL
- PROPOSED CUT
- PROPOSED CONCRETE SLEEPER RETAINING WALL
- BATTER BETWEEN ALLOTMENTS (at 1 in 2 max.)
- BATTER TO ALLOTMENT
- PROPOSED SEWERAGE LINE — S
- PROPOSED STORMWATER LINE — SW
- PROPOSED ROOFWATER LINE — RW

EPZ
Environmental Protection Zone to be clearly demarcated onsite and protected in accordance with the conditions of approval.

Fire Ant Movement Controls

To prevent the spread of fire ants, the Queensland Government has implemented controls that apply to individuals and commercial operators, to restrict the movement of materials that could carry fire ants including soil, turf, potted plants, mulch, baled hay or straw, animal manures, mining or quarry products.

Penalties apply for non-compliance with the movement controls, if you are unsure of your obligations under the Biosecurity Act 2014 contact the relevant Queensland State Government Department.

THIS APPROVAL SHOULD NOT BE TAKEN TO CONSTITUTE PERMISSION TO ENTER NEIGHBOURING PROPERTIES TO CONSTRUCT (INCLUDING ASSOCIATED WORKS SUCH AS DRAINAGE AND EXCAVATION) ANY BUILT TO BOUNDARY WALL OR FENCES. PERMISSION MUST BE OBTAINED FROM RELEVANT PROPERTY OWNERS.

FOR MAINTENANCE OF EXISTING VEGETATION AND REMOVAL, WHERE PERMITTED REFER TO THE APPROVED VEGETATION MANAGEMENT PLAN

TREE LEGEND

- TREES TO BE RETAINED AND PROTECTED
- TREES TO BE RETAINED AND REQUIRES THE SUPERVISION OF ANY EXCAVATION OR SERVICES WORKS WITHIN THE HATCHED PROTECTION ZONE BY AN ARBORIST ON SITE.

TPZ
Tree Protection Zone
All vegetation to be protected in accordance with AS4970 - Protection of Trees on Development Sites & any conditions of approval.

TABLE DRAIN SETOUT AND LEVEL TABLE

PT No.	TYPE	EASTING	NORTHING	LEVEL
1	IP	480999.067	7014667.795	155.80
2	IP	481008.200	7014669.747	155.84
3	IP	481015.599	7014673.574	155.88
4	IP	481017.724	7014674.673	155.29

DIAL BEFORE YOU DIG www.1100.com.au The Essential First Step

JFDP URBAN CONSULTANTS
BRISBANE - SUNSHINE COAST - CENTRAL QLD
BRISBANE
JFP House - 76 Ernest Street, South Brisbane Qld 4101
P 07 3012 0100 W www.jfp.com.au
JFP URBAN CONSULTANTS PTY. LTD. A.C.N. 050 414 045
PLANNERS
URBAN DESIGNERS
SURVEYORS
ENGINEERS
LANDSCAPE ARCHITECTS

NORTH: N

SCALE: 1:250 A1
THIS SCALE SHOWN IS ORIGINAL DRAWING SCALE
0 2.5 5 7.5 10 12.5 (A1) 1:250 25 Metres
(A3) 1:500
DO NOT SCALE FROM THIS DRAWING - USE ONLY DIMENSIONS PROVIDED - IF IN DOUBT PLEASE ENQUIRE

APPROVED — FOR AND ON BEHALF OF JFP URBAN CONSULTANTS PTY LTD
T.McKINNEY RPEQ 5087 | A.FRASER RPEQ 5691 | J.PAPPAS RPEQ 6086 | S.MARSH RPEQ 8068 | ☑ H.WATSON RPEQ 6200

DESIGNED	CDV
DRAWN	WN
CHECKED	PNH
DATUM: AHD	

ISSUE:	DETAILS:	DATE:	INIT:
D	INFORMATION REQUEST AMENDMENTS	03/04/23	CDV
C	NOTES AMENDED	28/02/23	CDV
B	EARTHWORKS AMENDED	01/07/22	CDV
A	ISSUE FOR OPERATIONAL WORKS APPROVAL	22/07/22	CDV

TITLE:
EARTHWORKS LAYOUT DETAILS PLAN - SHEET 2 OF 3
DFC (PROJECT MANAGEMENT) PTY LTD
'ARCHERS WAY' ESTATE - STAGE 4
AT 22-80 CASH STREET, D'AGUILAR

DENNIS FAMILY CORPORATION

DETAILS:
JOB NO: M2584E_4
PLAN: EW03 ISSUE: D
MORETON BAY REGIONAL COUNCIL REF: DA/38032/2019/V3VR
FILE NAME: EARTHWORKS.DWG

COPYRIGHT © 2011 JFP URBAN CONSULTANTS PTY LTD THIS DOCUMENT MAY NOT BE COPIED OR TRANSMITTED IN ANY FORM OR BY ANY MEANS IN PART OR IN WHOLE WITHOUT THE WRITTEN PERMISSION OF JFP URBAN CONSULTANTS PTY LTD.

Document Set ID: 66908359
Version: 1, Version Date: 09/05/2023
Moreton Bay Regional Council
Approved subject to conditions of Decision Notice DA/2023/0531
09/05/2023

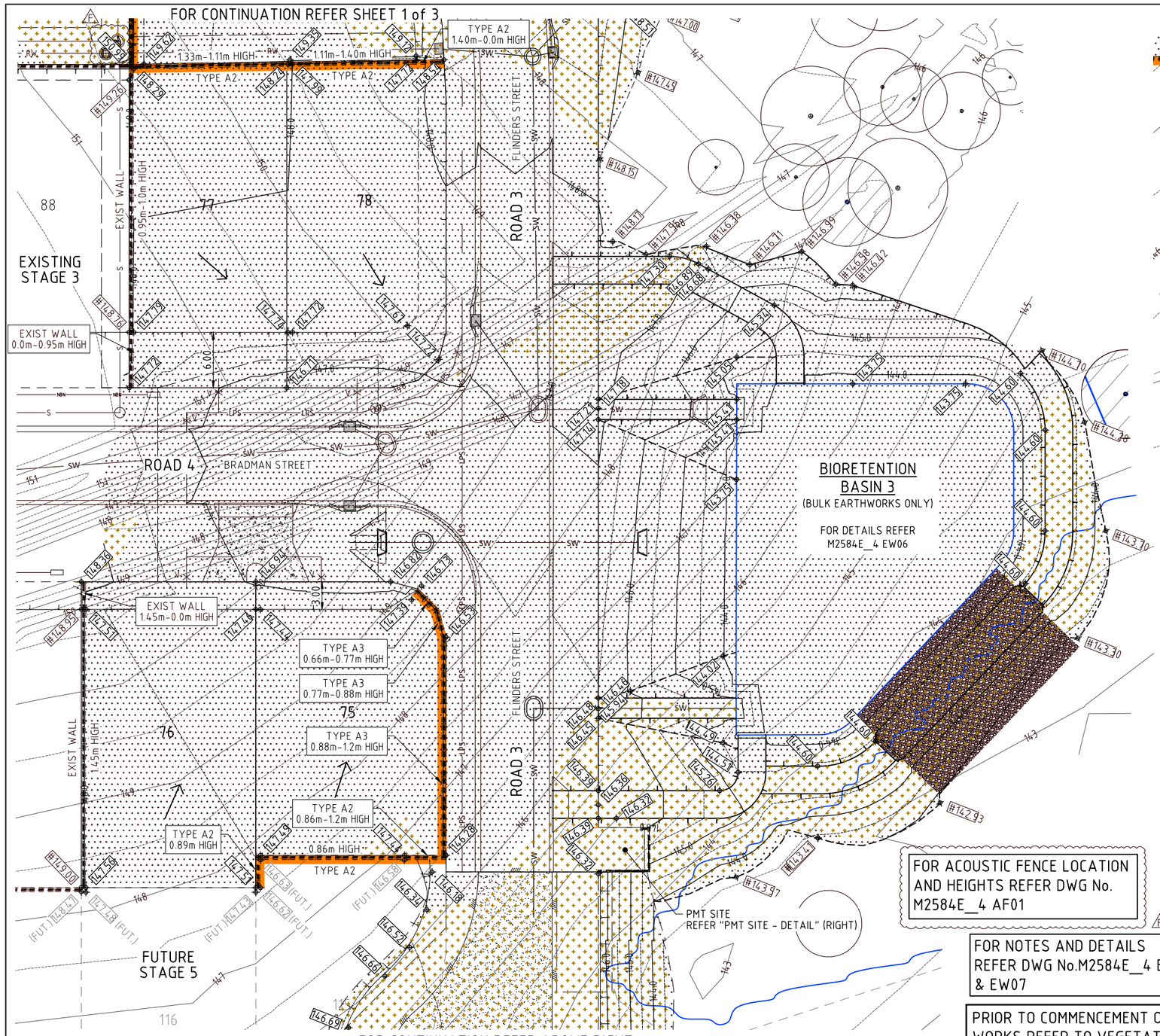

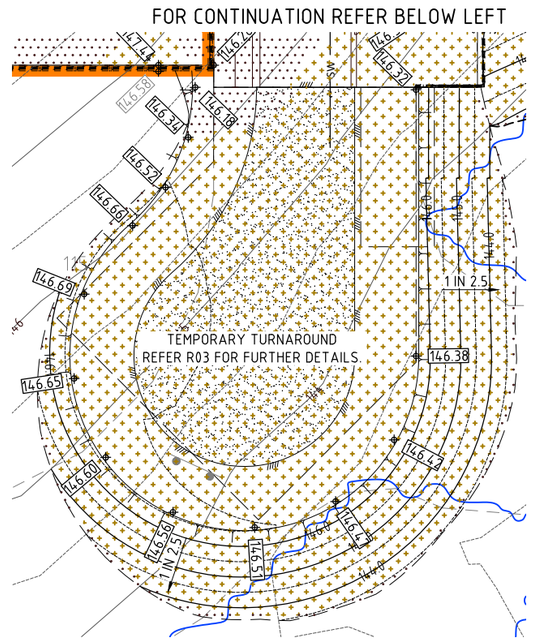

LEGEND:

- EXISTING CONTOURS — 32
- FINISHED CONTOURS — 32
- PROPOSED KERB AND CHANNEL
- SPOT LEVELS (#19.62 DENOTES NATURAL SURFACE LEVEL) — 19.06
- PROPOSED FILL
- PROPOSED CUT
- PROPOSED CONCRETE SLEEPER RETAINING WALL
- BATTER BETWEEN ALLOTMENTS (at 1 in 2 max.)
- BATTER TO ALLOTMENT
- PROPOSED SEWERAGE LINE — S
- PROPOSED STORMWATER LINE — SW
- PROPOSED ROOFWATER LINE — RW

TREE LEGEND

TREES TO BE RETAINED AND PROTECTED

TREES TO BE RETAINED AND REQUIRES THE SUPERVISION OF ANY EXCAVATION OR SERVICES WORKS WITHIN THE HATCHED PROTECTION ZONE BY AN ARBORIST ON SITE.

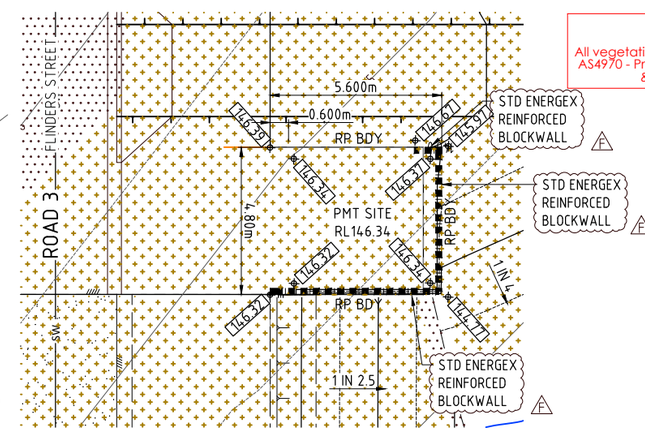

PMT SITE - DETAIL

SCALE 1:100

TPZ
Tree Protection Zone
All vegetation to be protected in accordance with AS4970 - Protection of Trees on Development Sites & any conditions of approval.

Fire Ant Movement Controls

To prevent the spread of fire ants, the Queensland Government has implemented controls that apply to individuals and commercial operators, to restrict the movement of materials that could carry fire ants including soil, turf, potted plants, mulch, baled hay or straw, animal manures, mining or quarry products.

Penalties apply for non-compliance with the movement controls, if you are unsure of your obligations under the Biosecurity Act 2014 contact the relevant Queensland State Government Department.

EPZ
Environmental Protection Zone to be clearly demarcated onsite and protected in accordance with the conditions of approval.

THIS APPROVAL SHOULD NOT BE TAKEN TO CONSTITUTE PERMISSION TO ENTER NEIGHBOURING PROPERTIES TO CONSTRUCT (INCLUDING ASSOCIATED WORKS SUCH AS DRAINAGE AND EXCAVATION) ANY BUILT TO BOUNDARY WALL OR FENCES. PERMISSION MUST BE OBTAINED FROM RELEVANT PROPERTY OWNERS.

FOR ACOUSTIC FENCE LOCATION AND HEIGHTS REFER DWG No. M2584E_4 AF01

FOR NOTES AND DETAILS REFER DWG No.M2584E_4 EW05 & EW07

PRIOR TO COMMENCEMENT OF WORKS REFER TO VEGETATION MANAGEMENT PLAN.

PMT SITE NOTE:
RETAINING WALLS IN ACCORDANCE WITH ENERGEX STANDARD PAD MOUNT TRANSFORMER SERIES 6229-A4

FOR MAINTENANCE OF EXISTING VEGETATION AND REMOVAL, WHERE PERMITTED REFER TO THE APPROVED VEGETATION MANAGEMENT PLAN

NOTE:
THE CONTRACTOR IS TO ENSURE THAT FOOTINGS FOR RETAINING WALLS ARE CLEAR OF THE PROPOSED SEWER AND ROOFWATER LINES.

SAFETY FENCE NOTE
STAR PICKET AND SAFETY BARRIER MESH FENCE TO BE ERECTED ON TOP OF ALL RETAINING WALLS GREATER THAN 1.0m IN HEIGHT

SPOT LEVELS
ALL LEVELS SHOWN ARE FINISHED SURFACE. SUBTRACT 100mm FOR EARTHWORKS LEVELS TO BATTERS & PARK AREAS, 150mm TO VERGES & 250mm TO ALLOTMENTS ALLOWING FOR TOPSOIL THICKNESS.

RETAINING WALL CERTIFICATION
1. CIVIL CONTRACTOR TO OBTAIN DESIGN AND CONSTRUCTION RPEQ CERTIFICATION FOR ALL CONCRETE SLEEPER, SANDSTONE BOULDER & CONCRETE BLOCK RETAINING WALLS.
2. WALL DESIGN AND CERTIFICATION TO BE PROVIDED TO SUPERVISING ENGINEER PRIOR TO CONSTRUCTION.
3. CONSTRUCTION CERTIFICATION TO BE PROVIDED TO SUPERVISING ENGINEER PRIOR TO "ON MAINTENANCE" INSPECTION.

EXISTING SERVICES LOCATIONS
THE DESIGN DETAILED ON THIS PLAN HAS BEEN PREPARED BASED ON SERVICE AUTHORITY AS CONSTRUCTED INFORMATION.
NO POT HOLING HAS BEEN UNDERTAKEN TO VERIFY EXISTING SERVICES LOCATIONS AND DEPTHS.
IT IS THE CONTRACTORS RESPONSIBILITY TO UNDERTAKE POT HOLING (HYDROVAC EXCAVATION) PRIOR TO COMMENCEMENT OF CONSTRUCTION.

DIAL BEFORE YOU DIG www.1100.com.au
The Essential First Step

JFP URBAN CONSULTANTS
BRISBANE - SUNSHINE COAST - CENTRAL QLD
BRISBANE
JFP House - 76 Ernest Street,
South Brisbane Qld 4101
P 07 3012 0100 W www.jfp.com.au
JFP URBAN CONSULTANTS PTY. LTD. A.C.N. 050 414 045
PLANNERS
URBAN DESIGNERS
SURVEYORS
ENGINEERS
LANDSCAPE ARCHITECTS

NORTH: N

SCALE: 1:250 A1
THIS SCALE SHOWN IS ORIGINAL DRAWING SCALE
0 2.5 5 7.5 10 12.5 (A1) 1:250 25 Metres
(A3) 1:500
DO NOT SCALE FROM THIS DRAWING - USE ONLY DIMENSIONS PROVIDED - IF IN DOUBT PLEASE ENQUIRE

APPROVED
FOR AND ON BEHALF OF JFP URBAN CONSULTANTS PTY LTD
T.M^C KINNEY RPEQ 5087
A.FRASER RPEQ 5691
J.PAPPAS RPEQ 6086
S.MARSH RPEQ 8068
H.WATSON RPEQ 6200

DESIGNED	CDV
DRAWN	WN
CHECKED	PNH
DATUM: AHD	

ISSUE:

ISSUE:	DETAILS:	DATE:	INIT:
F	INFORMATION REQUEST AMENDMENTS	03/04/23	CDV
E	LOT 75 WALL ADDED	27/02/23	CDV
D	ELECTRICAL TRANSFORMER & BIORETENTION BASIN ADDED	10/02/23	FR
C	EARTHWORKS AMENDED	01/08/22	CDV
B	EARTHWORKS AMENDED	01/07/22	CDV
A	ISSUE FOR OPERATIONAL WORKS APPROVAL	22/07/22	CDV

TITLE:
EARTHWORKS LAYOUT DETAILS PLAN - SHEET 3 OF 3
DFC (PROJECT MANAGEMENT) PTY LTD
'ARCHERS WAY' ESTATE - STAGE 4
AT 22-80 CASH STREET, D'AGUILAR

DENNIS FAMILY CORPORATION

DETAILS:
JOB NO: M2584E_4
PLAN: EW04 ISSUE: F
MORETON BAY REGIONAL COUNCIL REF: DA/38032/2019/V3VR
FILE NAME: EARTHWORKS.DWG

COPYRIGHT © 2011 JFP URBAN CONSULTANTS PTY LTD THIS DOCUMENT MAY NOT BE COPIED OR TRANSMITTED IN ANY FORM OR BY ANY MEANS IN PART OR IN WHOLE WITHOUT THE PERMISSION OF JFP URBAN CONSULTANTS PTY LTD.

Document Set ID: 6698359
Version: 1, Version Date: 09/05/2023
Moreton Bay Regional Council
Approved subject to conditions of Decision Notice DA/2023/0531
09/05/2023

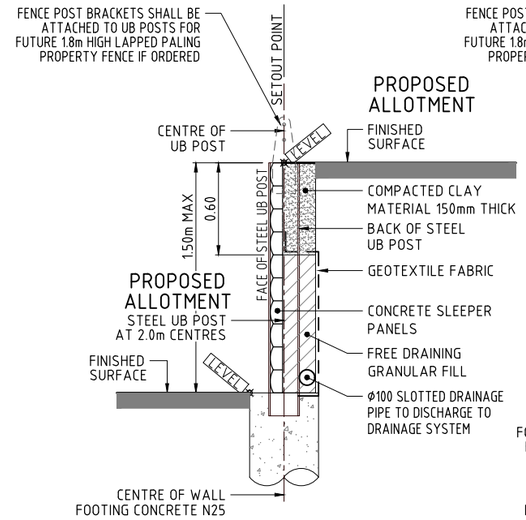

TYPICAL SECTION - TYPE A
CONCRETE SLEEPER/UB POST RETAINING WALL
SCALE 1:20

NOTE: RETAINING WALL DESIGN (INCLUDING FENCE POST BRACKETS AND FITTINGS) AND CONSTRUCTION CERTIFICATION TO INCORPORATE LOADING FROM FUTURE 1.8m HIGH LAPPED PALING PROPERTY FENCE

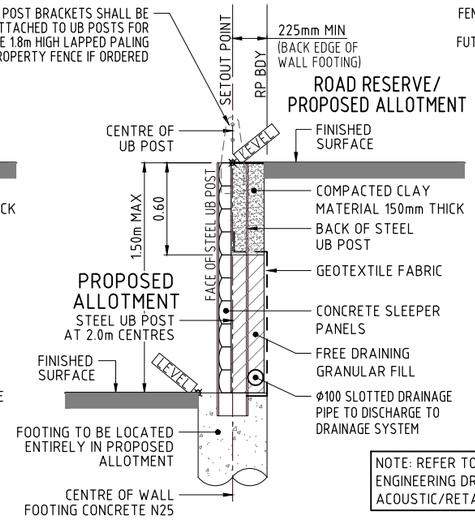

NOTE: REFER TO STRUCTURAL ENGINEERING DRAWINGS FOR ACOUSTIC/RETAINING WALL DETAILS.

TYPICAL SECTION - TYPE A2
CONCRETE SLEEPER/UB POST RETAINING WALL
SCALE 1:20

NOTE: RETAINING WALL DESIGN (INCLUDING FENCE POST BRACKETS AND FITTINGS) AND CONSTRUCTION CERTIFICATION TO INCORPORATE LOADING FROM FUTURE 1.8m HIGH LAPPED PALING PROPERTY FENCE

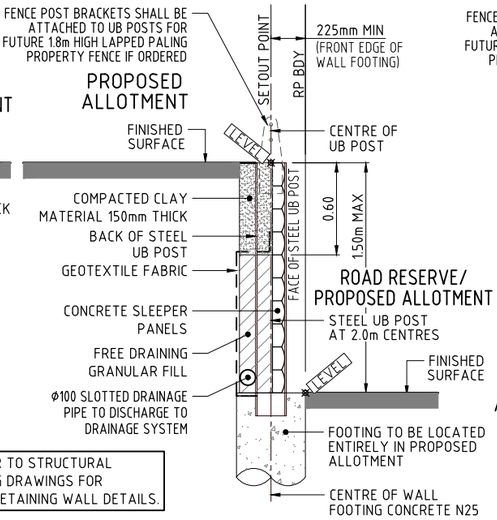

TYPICAL SECTION - TYPE A3
CONCRETE SLEEPER/UB POST RETAINING WALL
SCALE 1:20

NOTE: RETAINING WALL DESIGN (INCLUDING FENCE POST BRACKETS AND FITTINGS) AND CONSTRUCTION CERTIFICATION TO INCORPORATE LOADING FROM FUTURE 1.8m HIGH LAPPED PALING PROPERTY FENCE

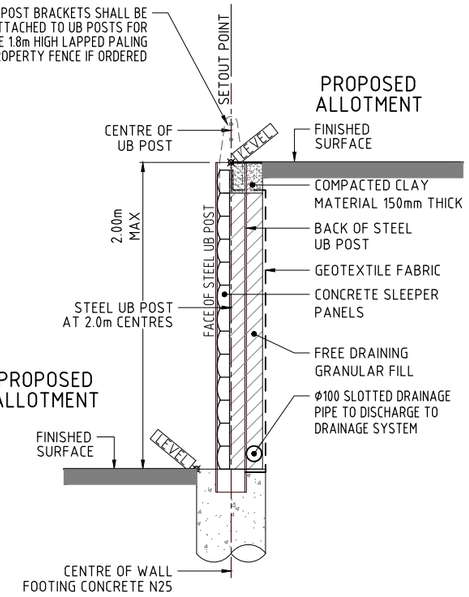

TYPICAL SECTION - TYPE B
CONCRETE SLEEPER/UB POST RETAINING WALL
SCALE 1:20

NOTE: RETAINING WALL DESIGN (INCLUDING FENCE POST BRACKETS AND FITTINGS) AND CONSTRUCTION CERTIFICATION TO INCORPORATE LOADING FROM FUTURE 1.8m HIGH LAPPED PALING PROPERTY FENCE

EARTHWORKS NOTES

1. ALL LOTS TO BE FREE DRAINING TO ROOFWATER DRAINAGE OR ROADWAY.

CLEARING AND GRUBBING

2. ANY CLEARING REQUIRED TO BE UNDERTAKEN BY THE CONTRACTOR IS TO BE STRICTLY IN ACCORDANCE WITH THE COUNCIL APPROVED VEGETATION MANAGEMENT PLAN, INCLUDING THE LIMITS OF ALLOWABLE CLEARING, TREE PROTECTION REQUIREMENTS AND THE USE OF A FAUNA SPOTTER/CATCHER, AS SPECIFIED.
3. UNLESS OTHERWISE SPECIFIED OR DIRECTED, THE AREA TO BE CLEARED IS THAT REQUIRED BY SITE REGRADING WORKS, INCLUDING THE AREA OCCUPIED BY THE COMPLETED ROAD FORMATION AND ASSOCIATED DRAINAGE WORKS AND EROSION AND SEDIMENTATION MEASURES, THE CONTRACTOR SHALL ENSURE THAT ONLY THE ABSOLUTE MINIMUM AREA FOR CONSTRUCTION IS CLEARED.
4. THE AREA WITHIN THE LIMITS OF CLEARING SHALL BE CLEARED OF ALL VEGETATION, BOTH LIVING AND DEAD, ALL MINOR MAN-MADE STRUCTURES (SUCH AS FENCES, BUILDING MATERIAL AND EXISTING DRIVEWAYS), ALL RUBBISH AND OTHER MATERIALS WHICH, IN THE OPINION OF THE SUPERINTENDENT, ARE UNSUITABLE FOR USE IN THE WORKS WITH THE EXCEPTION OF CERTAIN TREES MARKED FOR PRESERVATION.
5. ALL TREES AND STUMPS ON OR WITHIN THE LIMITS OF CLEARING, THAT ARE TO BE REMOVED BY GRUBBING OPERATION SHALL BE CARRIED OUT TO A DEPTH OF 0.5m BELOW THE NATURAL SURFACE OR 1.5 METRES BELOW THE FINISHED SURFACE LEVEL, WHICHEVER IS THE LOWER.

TOPSOIL

6. ALL TOPSOIL ON ROADWORKS AREAS SHALL BE STRIPPED AND STOCKPILED PRIOR TO THE COMMENCEMENT OF ANY EARTHWORKS OPERATIONS. A TOPSOIL DEPTH OF 150mm HAS BEEN USED TO DETERMINE TOPSOIL AND EARTHWORK QUANTITIES. THE CONTRACTOR IS TO SATISFY HIMSELF OF THE ACCURACY OF THESE QUANTITIES AND TO MAKE ANY NECESSARY ALLOWANCE IF HE DISAGREES WITH QUANTITIES.

EARTHWORKS

7. EARTHWORKS ARE TO BE IN ACCORDANCE WITH AS 3798 "GUIDELINES ON EARTHWORKS FOR COMMERCIAL AND RESIDENTIAL DEVELOPMENTS" (LATEST ISSUE - INCLUDING ALL AMENDMENTS).
8. ALL FILLING SHALL BE COMPLETED TO A LEVEL 1 ARRANGEMENT, UNDER THE SUPERVISION OF THE PRINCIPAL'S APPOINTED GEOTECHNICAL ENGINEER.
9. THE EARTHWORKS QUANTITIES FOR ROADWORKS ARE CALCULATED USING THE MINIMUM ALLOWABLE TOTAL PAVEMENT THICKNESS (NOMINAL PAVEMENT). VARIATIONS TO THE PAVEMENT DEPTHS WILL BE PAYABLE AT THE RATES SHOWN IN THE PRICED SCHEDULE OF RATES.
10. "CUT" AND "FILL" QUANTITIES HAVE BEEN CALCULATED TO THE UNDERSIDE OF THE TOPSOIL LAYER.
11. ALL EARTHWORK QUANTITIES HAVE BEEN CALCULATED AND BILLED IN THE CONTRACT AS "NETT" QUANTITIES, THAT IS NO ALLOWANCE FOR BULKING OR COMPACTION HAS BEEN MADE.
12. ALL FILL PLACED ON THIS SITE IS TO COMPRISE OF ONLY NATURAL EARTH AND ROCK AND IS TO BE FREE OF ALL CONTAMINANTS (REFER TO THE ENVIRONMENTAL PROTECTION ACT 1994 SECTION 11.), NO DEMOLITION MATERIAL IS TO BE USED.

ALLOTMENT FILLING COMPACTION/TESTING

13. MATERIAL TO BE PLACED IN 300mm(MAXIMUM) LAYERS AND COMPACTED TO A MINIMUM OF 95% AS. 1289(STANDARD) OF THE MAXIMUM DRY DENSITY.THE INSITU DENSITY OF THE FILL MATERIAL SHALL BE TESTED AT THE RATE OF ONE LOCATION PER ALLOTMENT AT THE FOLLOWING INTERVALS
    - TOTAL DEPTH LESS THAN 300mm: -NO TEST REQUIRED
    - TOTAL DEPTH OF FILL 300mm - 600mm: -ONE(1) TEST PER ALLOTMENT
    - TOTAL DEPTH EXCEEDING 600mm: -ONE(1) TEST IN THE FIRST LAYER THEN -ONE(1) TEST ON EACH ALTERNATIVE LAYER PLACED OVER THE FIRST LAYER

PRIOR TO COMMENCEMENT OF WORKS REFER TO VEGETATION MANAGEMENT PLAN.

EPZ
Environmental Protection Zone to be clearly demarcated onsite and protected in accordance with the conditions of approval.

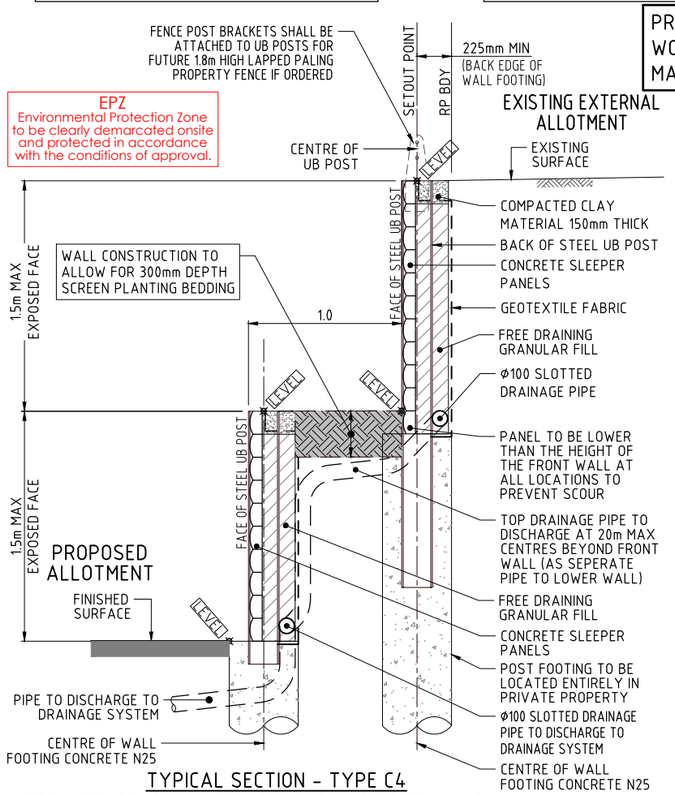

TYPICAL SECTION - TYPE C4
TERRACED CONCRETE SLEEPER/UB POST RETAINING WALL
SCALE 1:20

NOTE: RETAINING WALL DESIGN (INCLUDING FENCE POST BRACKETS AND FITTINGS) AND CONSTRUCTION CERTIFICATION TO INCORPORATE LOADING FROM FUTURE 1.8m HIGH LAPPED PALING PROPERTY FENCE

NOTE:
THE CONTRACTOR IS TO ENSURE THAT FOOTINGS FOR RETAINING WALLS ARE CLEAR OF THE PROPOSED SEWER AND ROOFWATER LINES.

THIS APPROVAL SHOULD NOT BE TAKEN TO CONSTITUTE PERMISSION TO ENTER NEIGHBOURING PROPERTIES TO CONSTRUCT (INCLUDING ASSOCIATED WORKS SUCH AS DRAINAGE AND EXCAVATION) ANY BUILT TO BOUNDARY WALL OR FENCES. PERMISSION MUST BE OBTAINED FROM RELEVANT PROPERTY OWNERS.

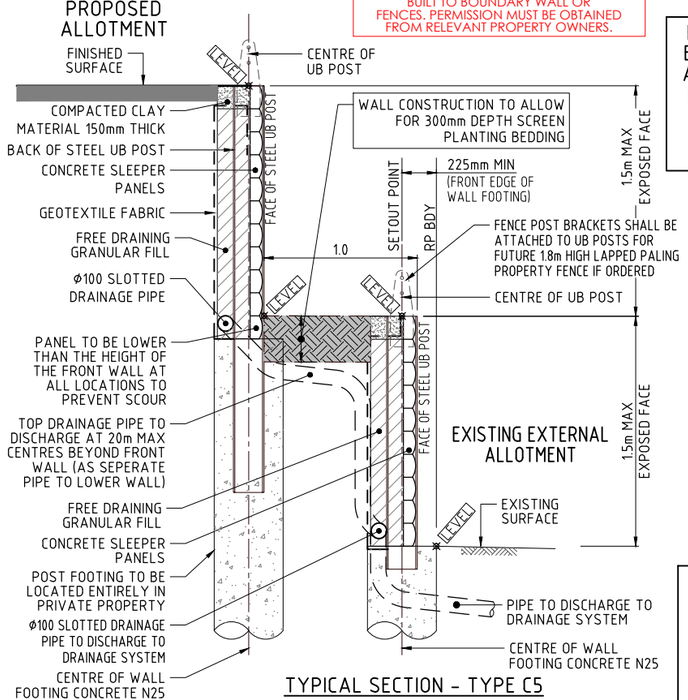

TYPICAL SECTION - TYPE C5
TERRACED CONCRETE SLEEPER/UB POST RETAINING WALL
SCALE 1:20

NOTE: RETAINING WALL DESIGN (INCLUDING FENCE POST BRACKETS AND FITTINGS) AND CONSTRUCTION CERTIFICATION TO INCORPORATE LOADING FROM FUTURE 1.8m HIGH LAPPED PALING PROPERTY FENCE

FOR MAINTENANCE OF EXISTING VEGETATION AND REMOVAL, WHERE PERMITTED REFER TO THE APPROVED VEGETATION MANAGEMENT PLAN

Fire Ant Movement Controls

To prevent the spread of fire ants, the Queensland Government has implemented controls that apply to individuals and commercial operators, to restrict the movement of materials that could carry fire ants including soil, turf, potted plants, mulch, baled hay or straw, animal manures, mining or quarry products.

Penalties apply for non-compliance with the movement controls, if you are unsure of your obligations under the Biosecurity Act 2014 contact the relevant Queensland State Government Department.

SAFETY FENCE NOTE

STAR PICKET AND SAFETY BARRIER MESH FENCE TO BE ERECTED ON TOP OF ALL RETAINING WALLS GREATER THAN 1.0m IN HEIGHT

RETAINING WALL CERTIFICATION

1. CIVIL CONTRACTOR TO OBTAIN DESIGN AND CONSTRUCTION RPEQ CERTIFICATION FOR ALL CONCRETE SLEEPER, SANDSTONE BOULDER & CONCRETE BLOCK RETAINING WALLS.
2. WALL DESIGN AND CERTIFICATION TO BE PROVIDED TO SUPERVISING ENGINEER PRIOR TO CONSTRUCTION.
3. CONSTRUCTION CERTIFICATION TO BE PROVIDED TO SUPERVISING ENGINEER PRIOR TO "ON MAINTENANCE" INSPECTION.

EXISTING SERVICES LOCATIONS

THE DESIGN DETAILED ON THIS PLAN HAS BEEN PREPARED BASED ON SERVICE AUTHORITY AS CONSTRUCTED INFORMATION. NO POT HOLING HAS BEEN UNDERTAKEN TO VERIFY EXISTING SERVICES LOCATIONS AND DEPTHS. IT IS THE CONTRACTORS RESPONSIBILITY TO UNDERTAKE POT HOLING (HYDROVAC EXCAVATION) PRIOR TO COMMENCEMENT OF CONSTRUCTION.

DIAL BEFORE YOU DIG www.1100.com.au The Essential First Step

NORTH:

SCALE: 1:20 A1 — THIS SCALE SHOWN IS ORIGINAL DRAWING SCALE (A1) 1:20 (A3) 1:40

DO NOT SCALE FROM THIS DRAWING - USE ONLY DIMENSIONS PROVIDED - IF IN DOUBT PLEASE ENQUIRE

APPROVED — FOR AND ON BEHALF OF JFP URBAN CONSULTANTS PTY LTD

T.McKINNEY RPEQ 5087 | A.FRASER RPEQ 5691 | J.PAPPAS RPEQ 6086 | S.MARSH RPEQ 8068 | H.WATSON RPEQ 6200

DESIGNED CDV | DRAWN WN | CHECKED PNH | DATUM: AHD

ISSUE:	DETAILS:	DATE:	INIT:
C	INFORMATION REQUEST AMENDMENTS	03/04/23	FR
B	TYPE A2 & A3 DETAIL AMENDED	28/02/23	CDV
A	ISSUE FOR OPERATIONAL WORKS APPROVAL	22/07/22	CDV

TITLE: EARTHWORKS DETAILS PLAN & NOTES

DFC (PROJECT MANAGEMENT) PTY LTD

'ARCHERS WAY' ESTATE - STAGE 4
AT 22-80 CASH STREET, D'AGUILAR

DENNIS FAMILY CORPORATION

DETAILS: JOB NO: M2584E_4 | PLAN: EW05 | ISSUE: C

MORETON BAY REGIONAL COUNCIL REF: DA/38032/2019/V3VR

FILE NAME: EARTHWORKS.DWG

JFP URBAN CONSULTANTS
BRISBANE - SUNSHINE COAST - CENTRAL QLD
BRISBANE
JFP House - 76 Ernest Street,
South Brisbane Qld 4101
P 07 3012 0100 W www.jfp.com.au
JFP URBAN CONSULTANTS PTY. LTD. A.C.N. 050 414 045
PLANNERS
URBAN DESIGNERS
SURVEYORS
ENGINEERS
LANDSCAPE ARCHITECTS

COPYRIGHT © 2011 JFP URBAN CONSULTANTS PTY LTD THIS DOCUMENT MAY NOT BE COPIED OR TRANSMITTED IN ANY FORM OR BY ANY MEANS IN PART OR IN WHOLE WITHOUT THE WRITTEN PERMISSION OF JFP URBAN CONSULTANTS PTY LTD.

Document Set ID: 66908359
Version: 1, Version Date: 09/05/2023
Moreton Bay Regional Council
Approved subject to conditions of Decision Notice DA/2023/0531
09/05/2023

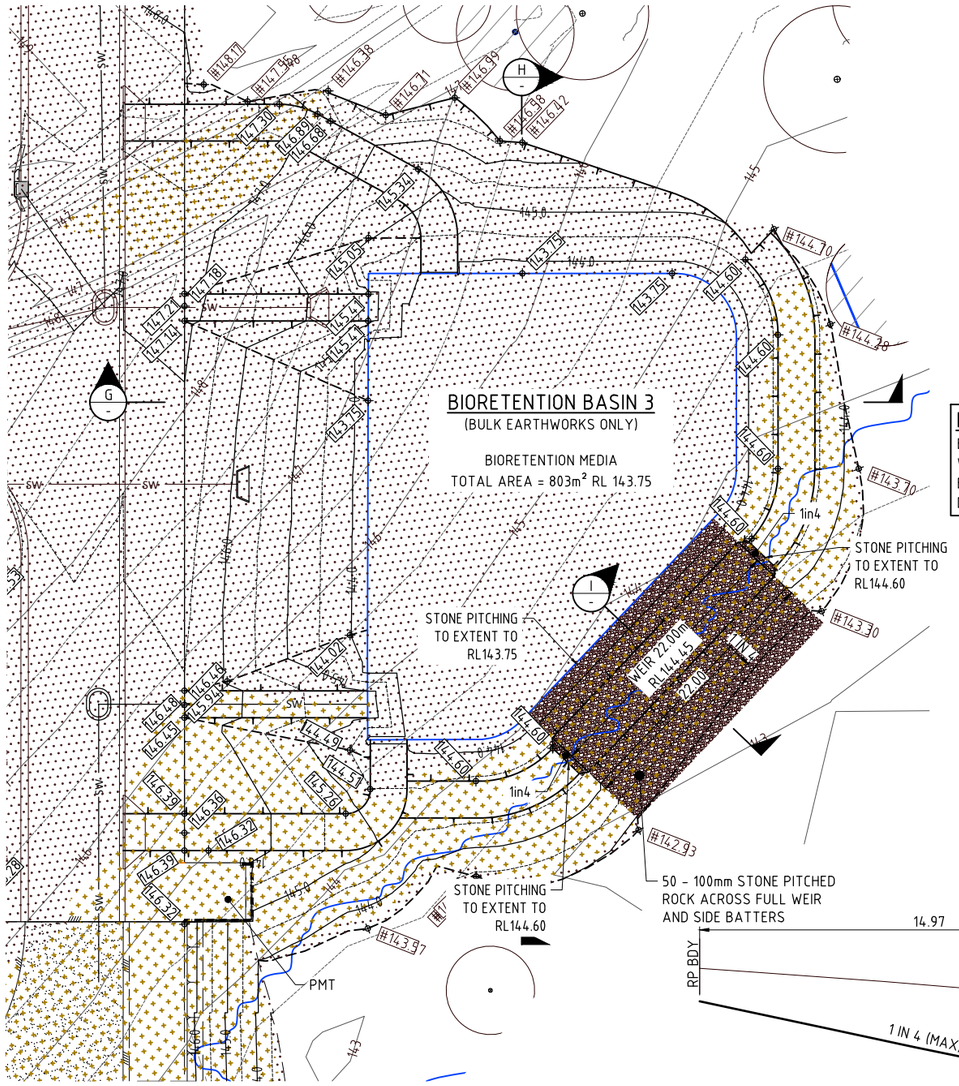

NOTE

BIORETENTION BULK EARTHWORKS ONLY (INCLUDING WALLS) TO BE BUILT IN STAGE 4 WORKS.
BIORETENTION MEDIA BASIN OUTLETDRAINS AND UNDER DRAINAGE TO BE BUILT AS PART OF STAGE 5 WORKS.

FOR MAINTENANCE OF EXISTING VEGETATION AND REMOVAL, WHERE PERMITTED REFER TO THE APPROVED VEGETATION MANAGEMENT PLAN

RETAINING WALL CERTIFICATION

1. CIVIL CONTRACTOR TO OBTAIN DESIGN AND CONSTRUCTION RPEQ CERTIFICATION FOR ALL CONCRETE SLEEPER, SANDSTONE BOULDER & CONCRETE BLOCK RETAINING WALLS.
2. WALL DESIGN AND CERTIFICATION TO BE PROVIDED TO SUPERVISING ENGINEER PRIOR TO CONSTRUCTION.
3. CONSTRUCTION CERTIFICATION TO BE PROVIDED TO SUPERVISING ENGINEER PRIOR TO "ON MAINTENANCE" INSPECTION.

SAFETY FENCE NOTE

STAR PICKET AND SAFETY BARRIER MESH FENCE TO BE ERECTED ON TOP OF ALL RETAINING WALLS GREATER THAN 1.0m IN HEIGHT

EXISTING SERVICES LOCATIONS

THE DESIGN DETAILED ON THIS PLAN HAS BEEN PREPARED BASED ON SERVICE AUTHORITY AS CONSTRUCTED INFORMATION.
NO POT HOLING HAS BEEN UNDERTAKEN TO VERIFY EXISTING SERVICES LOCATIONS AND DEPTHS.
IT IS THE CONTRACTORS RESPONSIBILITY TO UNDERTAKE POT HOLING (HYDROVAC EXCAVATION) PRIOR TO COMMENCEMENT OF CONSTRUCTION.

FOR NOTES AND DETAILS REFER DWG No.M2584E_4 EW05 & EW07

LEGEND:

- EXISTING CONTOURS — 32
- FINISHED CONTOURS — 32
- PROPOSED KERB AND CHANNEL
- SPOT LEVELS (#19.62 DENOTES NATURAL SURFACE LEVEL) — 19.06
- PROPOSED FILL
- PROPOSED CUT
- PROPOSED CONCRETE SLEEPER RETAINING WALL
- BATTER BETWEEN ALLOTMENTS (at 1 in 2 max.)
- BATTER TO ALLOTMENT
- PROPOSED SEWERAGE LINE — S
- PROPOSED STORMWATER LINE — SW
- PROPOSED ROOFWATER LINE — RW

REFER TO LANDSCAPE DRAWINGS FOR DETAILS OF FENCES ABOVE RETAINING WALLS

NOTE:

THE CONTRACTOR IS TO ENSURE THAT FOOTINGS FOR RETAINING WALLS ARE CLEAR OF THE PROPOSED SEWER AND ROOFWATER LINES.

SPOT LEVELS

ALL LEVELS SHOWN ARE FINISHED SURFACE. SUBTRACT 100mm FOR EARTHWORKS LEVELS TO BATTERS & PARK AREAS, 150mm TO VERGES & 250mm TO ALLOTMENTS ALLOWING FOR TOPSOIL THICKNESS.

THIS APPROVAL SHOULD NOT BE TAKEN TO CONSTITUTE PERMISSION TO ENTER NEIGHBOURING PROPERTIES TO CONSTRUCT (INCLUDING ASSOCIATED WORKS SUCH AS DRAINAGE AND EXCAVATION) ANY BUILT TO BOUNDARY WALL OR FENCES. PERMISSION MUST BE OBTAINED FROM RELEVANT PROPERTY OWNERS.

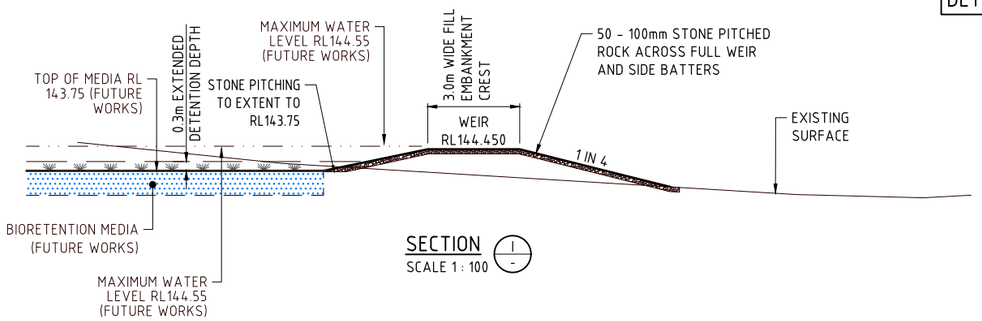

SECTION I
SCALE 1 : 100

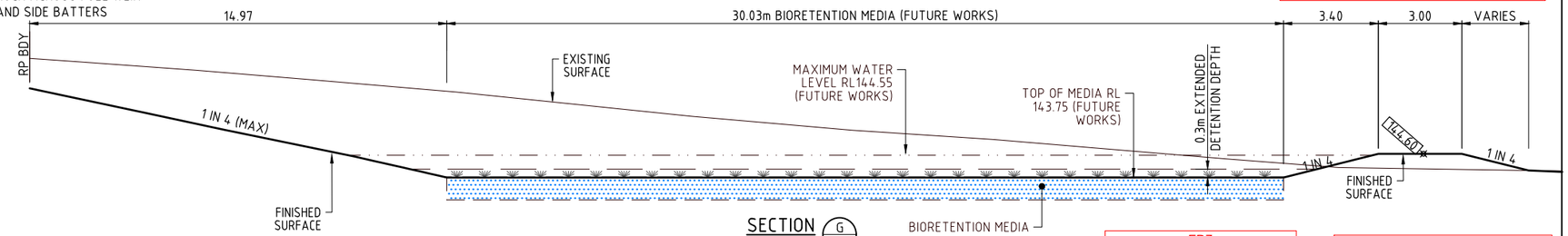

SECTION G
SCALE 1 : 100

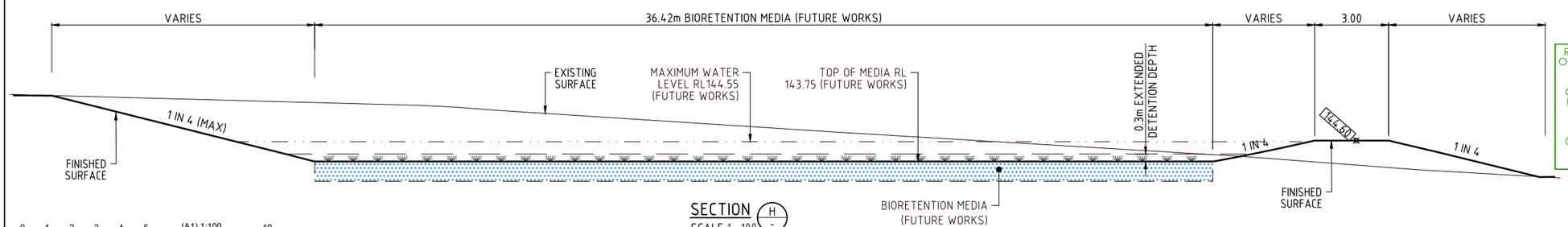

SECTION H
SCALE 1 : 100

EPZ
Environmental Protection Zone to be clearly demarcated onsite and protected in accordance with the conditions of approval.

RPEQ DESIGNED SHORING SYSTEM TO BE OBTAINED PRIOR TO COMMENCEMENT OF WORKS ON SITE.

CONTRACTOR TO ENSURE EXCAVATION FACE ADJACENT TO BOUNDARY IS IN A STABLE STATE AT ALL TIMES DURING CONSTRUCTION.

CONTRACTOR TO ENSURE NO DAMAGE OCCURS TO ADJOINING PROPERTY DURING WORKS.

Fire Ant Movement Controls

To prevent the spread of fire ants, the Queensland Government has implemented controls that apply to individuals and commercial operators, to restrict the movement of materials that could carry fire ants including soil, turf, potted plants, mulch, baled hay or straw, animal manures, mining or quarry products.

Penalties apply for non-compliance with the movement controls. If you are unsure of your obligations under the Biosecurity Act 2014 contact the relevant Queensland State Government Department.

DIAL BEFORE YOU DIG www.1100.com.au
The Essential First Step

0 1 2 3 4 5 (A1) 1:100 10 Metres
(A3) 1:200

JFP URBAN CONSULTANTS
BRISBANE - SUNSHINE COAST - CENTRAL QLD
BRISBANE
JFP House - 76 Ernest Street,
South Brisbane Qld 4101
P 07 3012 0100 W www.jfp.com.au
JFP URBAN CONSULTANTS PTY. LTD. A.C.N. 050 414 045
PLANNERS
URBAN DESIGNERS
SURVEYORS
ENGINEERS
LANDSCAPE ARCHITECTS

NORTH: N

SCALE: 1:250 A1
THIS SCALE SHOWN IS ORIGINAL DRAWING SCALE
0 2.5 5 7.5 10 12.5 (A1) 1:250 25 Metres
(A3) 1:500
DO NOT SCALE FROM THIS DRAWING - USE ONLY DIMENSIONS PROVIDED - IF IN DOUBT PLEASE ENQUIRE

APPROVED
FOR AND ON BEHALF OF JFP URBAN CONSULTANTS PTY LTD
☐ T.M.CKINNEY RPEQ 5087 ☐ A.FRASER RPEQ 5691 ☐ J.PAPPAS RPEQ 6086
☐ S.MARSH RPEQ 8068 ☑ H.WATSON RPEQ 6200

DESIGNED	CDV
DRAWN	WN
CHECKED	PNH
DATUM: AHD	

ISSUE:

ISSUE	DETAILS	DATE	INIT
D	INFORMATION REQUEST AMENDMENTS	03/04/23	CDV
C	MINOR AMENDMENTS	##/03/23	FR
B	STONE PITCHING ADDED TO WEIR	28/02/23	CDV
A	ISSUE FOR OPERATIONAL WORKS APPROVAL	10/02/23	CDV

TITLE:
EARTHWORKS BIORETENTION BASIN 3 LAYOUT PLAN AND DETAILS
DFC (PROJECT MANAGEMENT) PTY LTD
'ARCHERS WAY' ESTATE - STAGE 4
AT 22-80 CASH STREET, D'AGUILAR

DENNIS FAMILY CORPORATION

DETAILS:
JOB NO: M2584E_4
PLAN: EW06 ISSUE: D
MORETON BAY REGIONAL COUNCIL REF: DA/38032/2019/V3VR
FILE NAME: EARTHWORKS.DWG

COPYRIGHT © 2011 JFP URBAN CONSULTANTS PTY LTD THIS DOCUMENT MAY NOT BE COPIED OR TRANSMITTED IN ANY FORM OR BY ANY MEANS IN PART OR IN WHOLE WITHOUT THE PERMISSION OF JFP URBAN CONSULTANTS PTY LTD.

6/04/2023 R:\M2584S\M2584E_4\DES\EW\W\EW05\DRAWING\EW05\EARTHWORKS

Document Set ID: 66908359
Version: 1, Version Date: 09/05/2023
Moreton Bay Regional Council
Approved subject to conditions of Decision Notice DA/2023/0531
09/05/2023

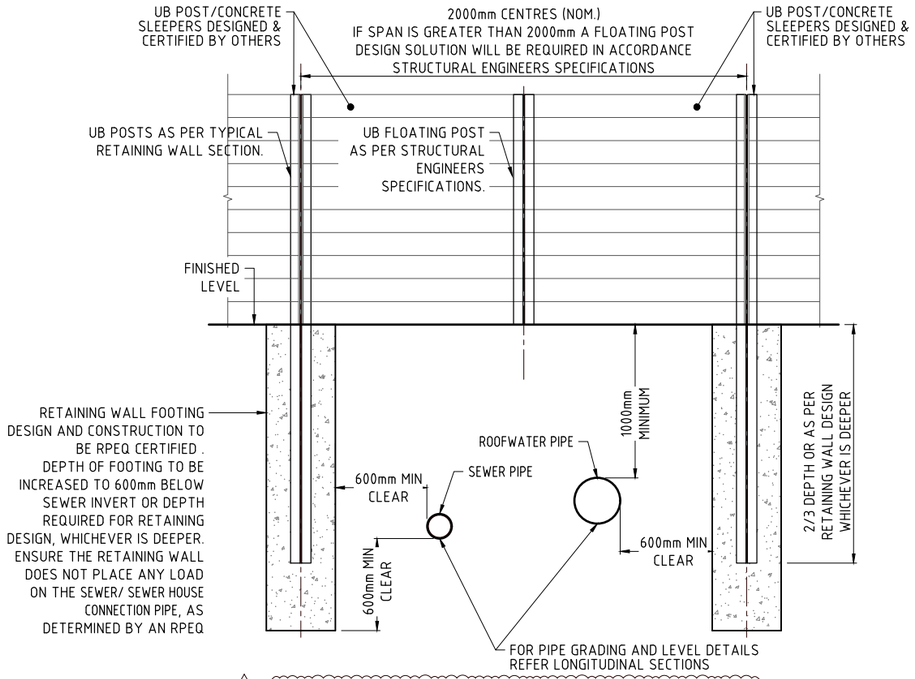

B

TYPICAL DETAIL - SEWER & DRAINAGE CROSSING UNDER CONCRETE SLEEPER RETAINING WALL

SCALE 1 : 20

APPROVED RETAINING WALL STRUCTURAL DESIGN INCLUDING A FORM 15 AND A SIGNED CONSTRUCT OVER ASSET (COA) FORM ISSUED BY A REGISTERED PROFESSIONAL ENGINEER (RPEQ) AND APPROVED BY TO UNITYWATER.

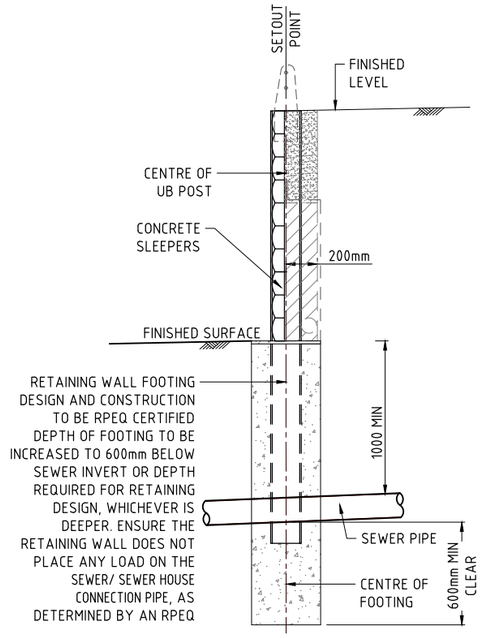

SECTION A-A

SCALE 1 : 20

NOTE: FOR ALL OTHER WALL DETAILS REFER TO THE SPECIFIC WALL DETAIL AS ADVISED ON THE PROJECT DRAWINGS

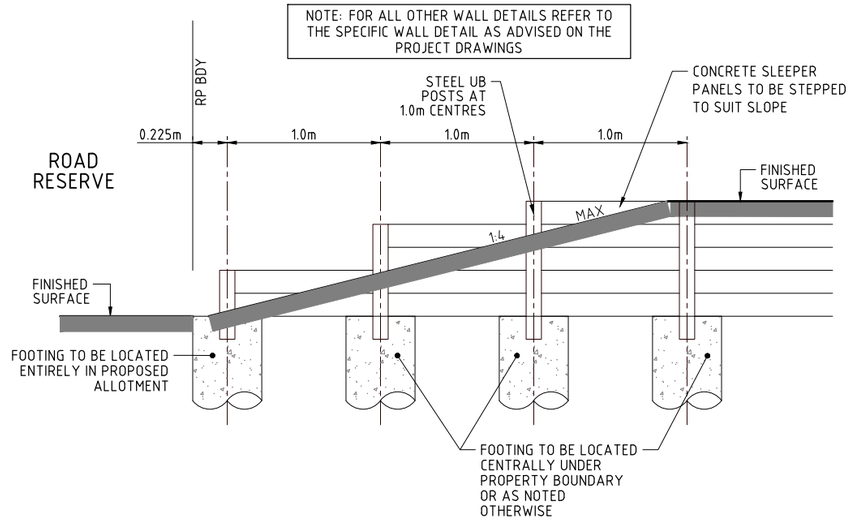

TYPICAL END OF SLEEPER WALL DETAIL BETWEEN INTERNAL ADJACENT LOTS

SCALE 1:20

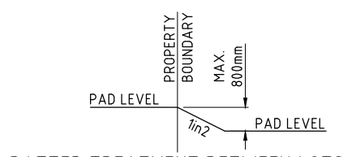

BATTER TREATMENT BETWEEN LOTS

N.T.S.

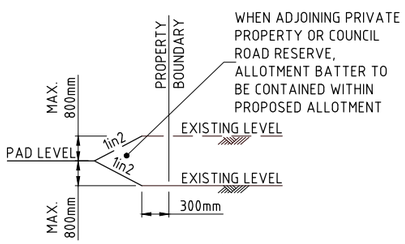

BATTER TREATMENT WITH EXTERAL PROPERTIES

N.T.S.

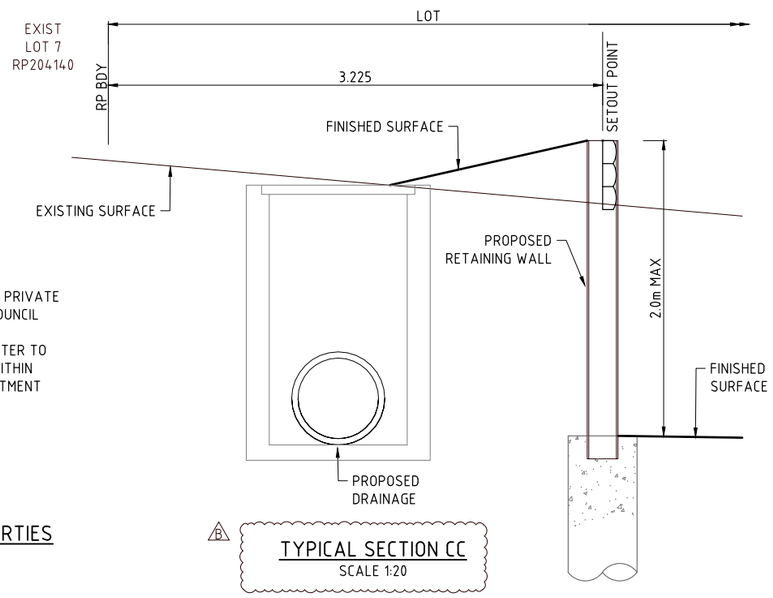

B

TYPICAL SECTION CC

SCALE 1:20

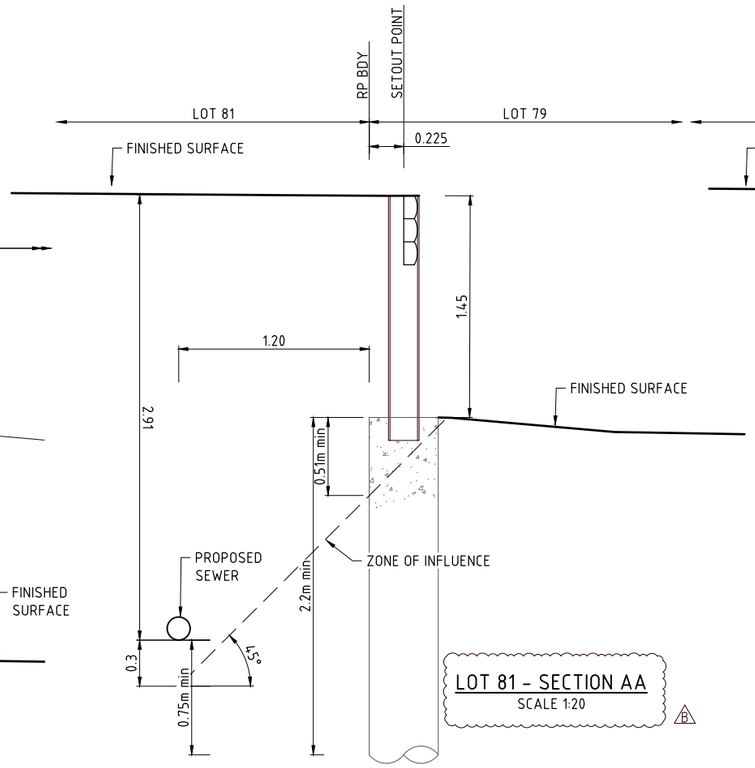

LOT 81 - SECTION AA

SCALE 1:20

B

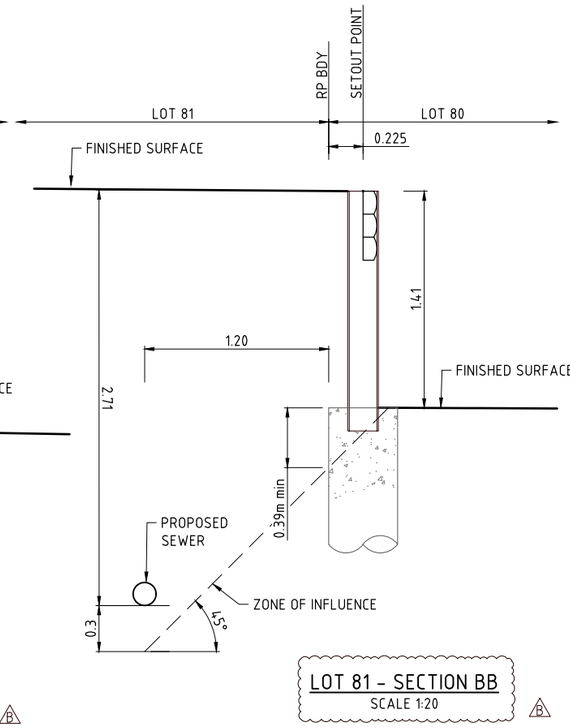

LOT 81 - SECTION BB

SCALE 1:20

B

DIAL BEFORE YOU DIG www.1100.com.au The Essential First Step

NORTH:

SCALE: 1:20 A1

THIS SCALE SHOWN IS ORIGINAL DRAWING SCALE

0 0.2 0.4 0.6 0.8 1 (A1) 1:20 2 Metres (A3) 1:40

DO NOT SCALE FROM THIS DRAWING - USE ONLY DIMENSIONS PROVIDED - IF IN DOUBT PLEASE ENQUIRE

APPROVED — FOR AND ON BEHALF OF JFP URBAN CONSULTANTS PTY LTD

☐ T.McKINNEY RPEQ 5087 ☐ A.FRASER RPEQ 5691 ☐ J.PAPPAS RPEQ 6086 ☐ S.MARSH RPEQ 8068 ☑ H.WATSON RPEQ 6200

DESIGNED	CDV
DRAWN	WN
CHECKED	PNH
DATUM: AHD	

ISSUE:

ISSUE:	DETAILS:	DATE:	INIT:
B	INFORMATION REQUEST AMENDMENTS	03/04/23	CDV
A	ISSUE FOR OPERATIONAL WORKS APPROVAL	22/07/22	CDV

TITLE:

EARTHWORKS ADDITIONAL DETAILS & NOTES PLAN

DFC (PROJECT MANAGEMENT) PTY LTD

'ARCHERS WAY' ESTATE - STAGE 4
AT 22-80 CASH STREET, D'AGUILAR

DENNIS FAMILY CORPORATION

DETAILS:

JOB NO: M2584E_4
PLAN: EW07 ISSUE: B
MORETON BAY REGIONAL COUNCIL REF: DA/38032/2019/V3VR
FILE NAME: EARTHWORKS.DWG

JFP URBAN CONSULTANTS
BRISBANE - SUNSHINE COAST - CENTRAL QLD
BRISBANE
JFP House - 76 Ernest Street,
South Brisbane Qld 4101
P 07 3012 0100 W www.jfp.com.au
JFP URBAN CONSULTANTS PTY. LTD. A.C.N. 050 414 045
PLANNERS
URBAN DESIGNERS
SURVEYORS
ENGINEERS
LANDSCAPE ARCHITECTS

COPYRIGHT © 2011 JFP URBAN CONSULTANTS PTY LTD THIS DOCUMENT MAY NOT BE COPIED OR TRANSMITTED IN ANY FORM OR BY ANY MEANS IN PART OR IN WHOLE WITHOUT THE WRITTEN PERMISSION OF JFP URBAN CONSULTANTS PTY LTD.

Document Set ID: 66908359
Version: 1, Version Date: 09/05/2023
Moreton Bay Regional Council
Approved subject to conditions of Decision Notice DA/2023/0531
09/05/2023

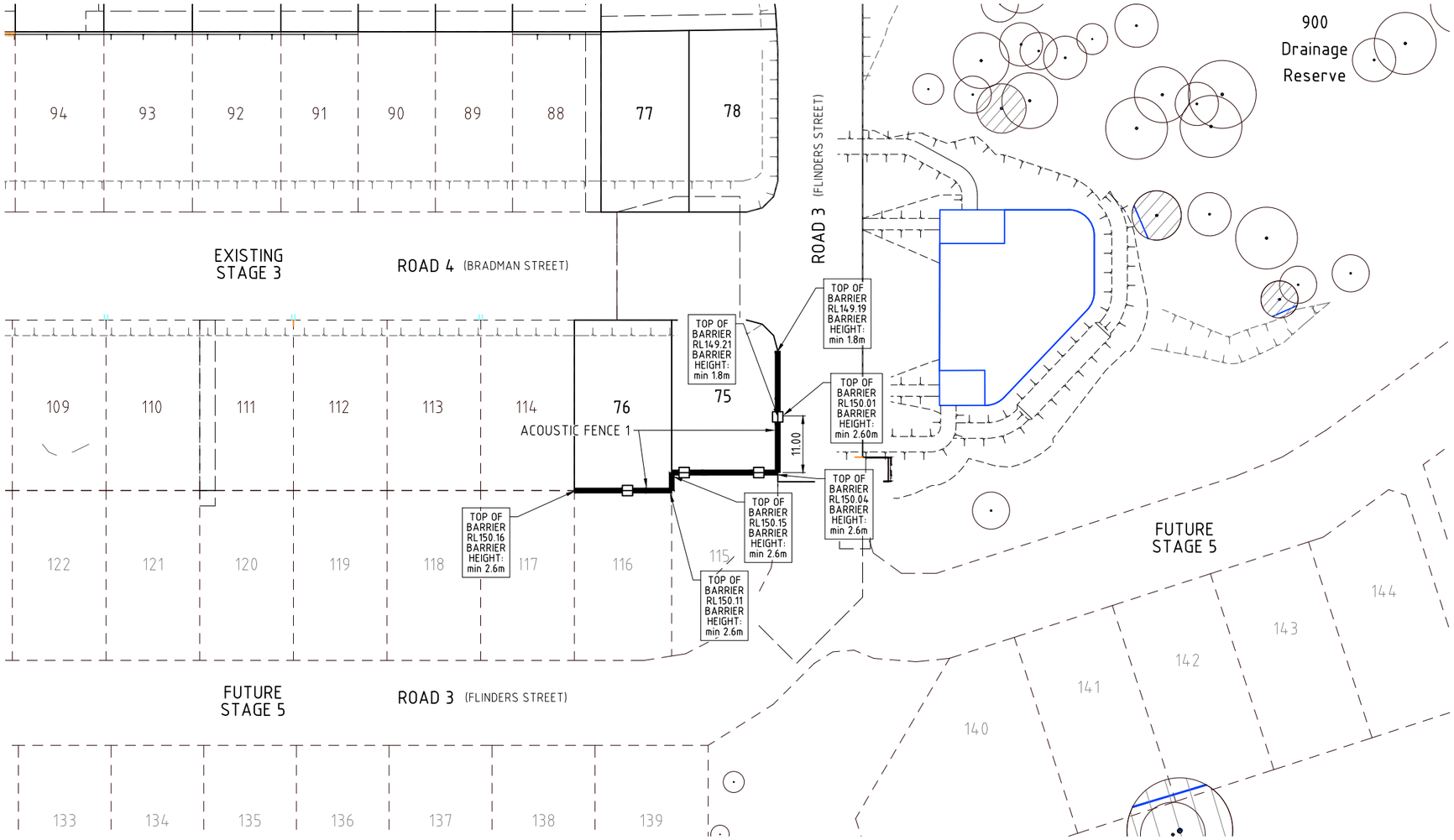

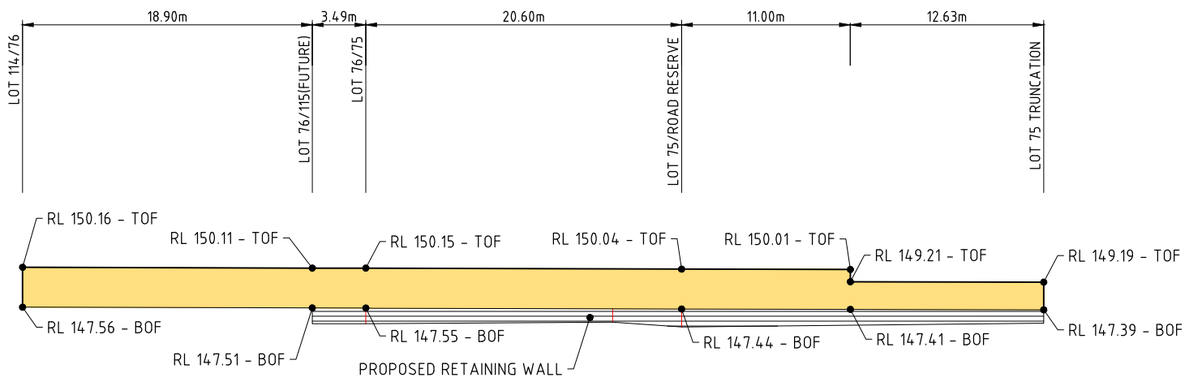

1:200

0 2 4 6 8 10 (A1) 1:200 20 Metres
(A3) 1:400

ACOUSTIC FENCE 1 - ELEVATION

SCALE 1:200

LEGEND

SOUND FENCE TO TTM & DTMR REQUIREMENTS

PROPERTY BOUNDARY

TREE LEGEND

TREES PROPOSED TO BE RETAINED AND PROTECTED.

TREES PROPOSED TO BE RETAINED AND REQUIRE ARBORIST (AQF5) DIRECTION & SUPERVISION FOR TPZ WORKS.

TREE PROTECTION ZONE (TPZ)
TPZ to be protected in accordance with Protection of Trees on Development Sites (AS4970-2009) guidelines & any approval conditions.

ACOUSTIC BARRIER NOTES:

ACOUSTIC BARRIERS ARE REQUIRED TO ACHIEVE COMPLIANCE WITH P038 OF STATE CODE 1 AND TO REDUCE QDC MP4.4 REQUIREMENTS AT GROUND FLOOR LEVEL.

THE ACOUSTIC BARRIER RECOMMENDATIONS ARE AS FOLLOWS:

A) THE ACOUSTIC BARRIERS MUST BE THE MINIMUM TOTAL HEIGHTS, INCLUDING ANY RETURNS, RELATIVE TO FINISHED GROUND EARTHWORK LEVEL.

B) THE BARRIER MUST BE CONSTRUCTED ACCORDANCE WITH THE REQUIREMENTS OF:

- CHAPTER 7 INTEGRATED NOISE BARRIER DESIGN OF THE TRANSPORT NOISE MANAGEMENT CODE OF PRACTICE: VOLUME 1 (ROAD TRAFFIC NOISE), DEPARTMENT OF TRANSPORT AND MAIN ROADS 2013,
- TRANSPORT AND MAIN ROADS SPECIFICATIONS MRTS15 NOISE FENCES,
- TECHNICAL SPECIFICATION-MRTS04 GENERAL EARTHWORKS, TRANSPORT AND MAIN ROADS, 2020.

C) THE NOISE BARRIER DESIGN MAY NEED TO BE SUBMITTED TO THE DEPARTMENT OF TRANSPORT AND MAIN ROADS FOR REVIEW AND ENDORSEMENT, PRIOR TO THE COMMENCEMENT OF CONSTRUCTION (CHECK DEVELOPMENT APPROVAL CONDITIONS).

D) BE CONSTRUCTED OF A MATERIAL WITH A SURFACE MASS NOT LESS THAN 15KG/M2 AND BE FREE OF GAPS OR HOLES INCLUDING AT THE BASE.

E) SUITABLE MATERIALS INCLUDE EARTH MOUND, PLYWOOD, STEEL, MASONRY, AND COMPOSITE PANELS SUCH AS MODULAR WALLS. A COMBINATION OF MATERIALS CAN BE USED IF DESIRED PROVIDED THEY ACHIEVE COMPLIANCE WITH MRTS15.

F) NOTE: LAPPED TIMBER PALINGS MAY NOT BE DEEMED AS AN ACCEPTED MATERIAL BY DEPARTMENT OF TRANSPORT AND MAIN ROADS.

ACOUSTIC FENCE TO BE CONSTRUCTED TO HEIGHTS AND IN ACCORDANCE WITH APPROVED "ROAD TRAFFIC NOISE ASSESSMENT REPORT" PREPARED BY TTM CONSULTING PTY LTD DATED 12th SEPTEMBER 2022 REPORT No: 18GCA0119 R03_0

DIAL BEFORE YOU DIG www.1100.com.au The Essential First Step

URBAN CONSULTANTS
JFP
BRISBANE - SUNSHINE COAST - CENTRAL QLD
BRISBANE
JFP House - 76 Ernest Street,
South Brisbane Qld 4101
P 07 3012 0100 W www.jfp.com.au
JFP URBAN CONSULTANTS PTY. LTD. A.C.N. 050 414 045
PLANNERS
URBAN DESIGNERS
SURVEYORS
ENGINEERS
LANDSCAPE ARCHITECTS

NORTH: N

SCALE: 1:500 A1
THIS SCALE SHOWN IS ORIGINAL DRAWING SCALE
0 5 10 15 20 25 (A1) 1:500 50 Metres
(A3) 1:1000
DO NOT SCALE FROM THIS DRAWING - USE ONLY DIMENSIONS PROVIDED - IF IN DOUBT PLEASE ENQUIRE

APPROVED Date?
FOR AND ON BEHALF OF JFP URBAN CONSULTANTS PTY LTD
T.McKINNEY RPEQ 5087
A.FRASER RPEQ 5691
J.PAPPAS RPEQ 6086
S.MARSH RPEQ 8068
H.WATSON RPEQ 6200

DESIGNED	CDV
DRAWN	WN
CHECKED	PNH
DATUM: AHD	

ISSUE:	DETAILS:	DATE:	INIT:
A	ISSUE FOR OPERATIONAL WORKS APPROVAL	23/08/22	CDV

TITLE:

ACOUSTIC FENCE LAYOUT & ELEVATION PLAN

DFC (PROJECT MANAGEMENT) PTY LTD

'ARCHERS WAY' ESTATE - STAGE 4
AT 22-80 CASH STREET, D'AGUILAR

DENNIS FAMILY CORPORATION

DETAILS:
JOB NO: M2584E_4
PLAN: AF01
ISSUE: A
MORETON BAY REGIONAL COUNCIL REF: DA/38032/2019/V3VR
FILE NAME: ACOUSTIC FENCE.DWG

COPYRIGHT © 2011 JFP URBAN CONSULTANTS PTY LTD THIS DOCUMENT MAY NOT BE COPIED OR TRANSMITTED IN ANY FORM OR BY ANY MEANS IN PART OR IN WHOLE WITHOUT THE PERMISSION OF JFP URBAN CONSULTANTS PTY LTD.

Document Set ID: 66908357
Version: 1, Version Date: 09/05/2023
Moreton Bay Regional Council
Approved subject to conditions of Decision Notice DA/2023/0531
09/05/2023

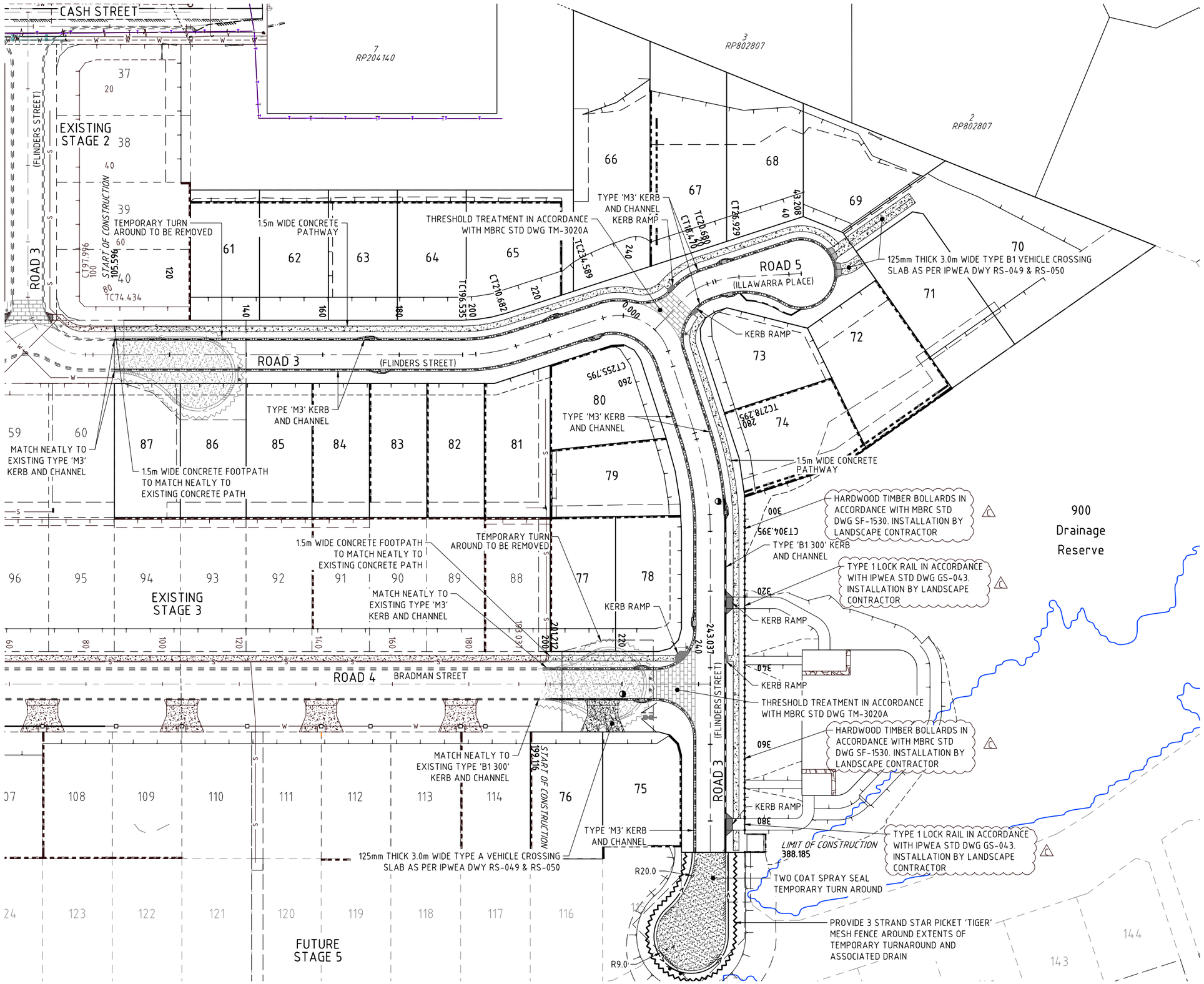

LEGEND :

- FINISHED CONTOURS
- EXISTING KERB AND CHANNEL
- EXISTING STORMWATER
- EXISTING SEWERAGE
- EXISTING WATER
- EXISTING U/G ELECTRICAL
- EXISTING TELSTRA
- PROPOSED KERB AND CHANNEL
- FUTURE KERB AND CHANNEL
- PROPOSED RETAINING WALL
- DENOTES TRANSITION IN K&C REFER INTERSECTION DETAILS
- SINGLE PLATE STREET NAME SIGN
- HAZARD MARKER D4-5
- THRESHOLD TREATMENT
- BOLLARDS @ 1.5m CENTRES

PRIOR TO COMMENCEMENT OF WORKS REFER TO VEGETATION MANAGEMENT PLAN.

NOTE: ALL RADII ARE MEASURED TO THE LIP OF THE KERB AND CHANNEL.
◑ 1.8m LENGTH TRANSITION BETWEEN KERB TYPES UNLESS SHOWN OTHERWISE.

FOR NOTES REFER TO DWG No. M2584E_4 R02

REFER TO LANDSCAPE PLANS FOR FINAL TRIM DETAILS

FOR EARTHWORKS DETAILS REFER TO DWG No. M2584E_4 EW05

THE CONTRACTOR IS TO NOTIFY THE SUPERVISING ENGINEER OF ANY DISCREPENCIES BETWEEN THE DESIGN PLANS AND THE CONDITIONS ON SITE PRIOR TO COMMENCEMENT OF ANY WORK.

DIAL BEFORE YOU DIG www.1100.com.au The Essential First Step

JFP URBAN CONSULTANTS
BRISBANE - SUNSHINE COAST - CENTRAL QLD
BRISBANE
JFP House - 76 Ernest Street,
South Brisbane Qld 4101
P 07 3012 0100 W www.jfp.com.au
JFP URBAN CONSULTANTS PTY. LTD. A.C.N. 050 414 045
PLANNERS
URBAN DESIGNERS
SURVEYORS
ENGINEERS
LANDSCAPE ARCHITECTS

NORTH: N

SCALE: 1:500 A1

THIS SCALE SHOWN IS ORIGINAL DRAWING SCALE
0 5 10 15 20 25 (A1) 1:500 50 Metres
(A3) 1:1000

DO NOT SCALE FROM THIS DRAWING - USE ONLY DIMENSIONS PROVIDED - IF IN DOUBT PLEASE ENQUIRE

APPROVED
FOR AND ON BEHALF OF JFP URBAN CONSULTANTS PTY LTD
T.McKINNEY RPEQ 5087
A.FRASER RPEQ 5691
J.PAPPAS RPEQ 6086
S.MARSH RPEQ 8068
H.WATSON RPEQ 6200

DESIGNED	CDV
DRAWN	WN
CHECKED	PNH
DATUM: AHD	

ISSUE:	DETAILS:	DATE:	INIT:
C	TIMBER BOLLARDS AND LOCK RAIL ADDED	17/04/23	FR
B	ELECTRICAL TRANSFORMER ADDED	10/02/23	FR
A	ISSUE FOR OPERATIONAL WORKS APPROVAL	23/08/22	CDV

TITLE:

ROADWORKS LAYOUT PLAN

DFC (PROJECT MANAGEMENT) PTY LTD

'ARCHERS WAY' ESTATE - STAGE 4
AT 22-80 CASH STREET, D'AGUILAR

DENNIS FAMILY CORPORATION

DETAILS:
JOB NO: M2584E_4
PLAN: R01 ISSUE: C
MORETON BAY REGIONAL COUNCIL REF: DA/38032/2019/V3VR
FILE NAME: ROADWORKS.DWG

COPYRIGHT © 2011 JFP URBAN CONSULTANTS PTY LTD THIS DOCUMENT MAY NOT BE COPIED OR TRANSMITTED IN ANY FORM OR BY ANY MEANS IN PART OR IN WHOLE WITHOUT THE WRITTEN PERMISSION OF JFP URBAN CONSULTANTS PTY LTD.

1/05/2023 N:\M2584E\STAGE_4\DESIGN\WORKING\DRAWINGS\ROADWORKS

Document Set ID: 66908359
Version: 1, Version Date: 09/05/2023
Moreton Bay Regional Council
Approved subject to conditions of Decision Notice DA/2023/0531
09/05/2023

ROADWORKS NOTES

1. ALL DIMENSIONS ON THE DRAWINGS ARE IN METRES UNLESS SHOWN OTHERWISE.
2. ALL TURNOUT RADII ARE TO THE LIP OF THE CHANNEL.
3. LENGTH AND LOCATION OF MITRE DRAINS SHALL BE DETERMINED ON SITE BY THE SUPERINTENDENT.
4. ALL WORKS SHALL BE CARRIED OUT IN ACCORDANCE WITH CURRENT MORETON BAY REGIONAL COUNCIL STANDARDS AND STANDARD DRAWINGS UNLESS DIRECTED OTHERWISE.
5. THE CONTRACTOR SHALL VERIFY LOCATIONS OF ALL EXISTING SERVICES WITH ALL RELEVANT AUTHORITIES BEFORE COMMENCING CONSTRUCTION. ANY COSTS ASSOCIATED WITH REPAIRING DAMAGE TO EXISTING SERVICES SHALL BE PAID FOR BY THE CONTRACTOR.
6. THE CONTRACTOR SHALL ERECT TRAFFIC CONTROL DEVICES IN ACCORDANCE WITH THE RELEVANT AUTHORITY SPECIFICATIONS.
7. SUB-BASE GRAVEL COMPACTED TO 95% AS1289 (MODIFIED) AND OF MINIMUM THICKNESS 75mm SHALL EXTEND UNDER THE KERB AND CHANNEL TO 150mm (MIN.) BEHIND THE KERB.
8. NBN TO RECEIVE 3 WEEKS NOTICE BEFORE INSTALLATION OF CONDUITS.
9. THE CONTRACTOR SHALL VERIFY OFFSET PEG LOCATIONS AND BENCH MARK LEVELS AND ADVISE THE SUPERINTENDENT OF ANY DISCREPANCY BEFORE THE COMMENCEMENT OF CONSTRUCTION.
10. KERB AND CHANNEL TO BE CONSTRUCTED IN ACCORDANCE WITH MBRC STD. DWG. RS-080.
11. SIDE DRAINS SHALL BE CONSTRUCTED IN ACCORDANCE WITH MBRC STD DRAWINGS RS-140 AND 142.
    a. TRIMMING AND COMPACTION OF SUBGRADE IS TO BE COMPLETED AND APPROVED BEFORE SUBSOIL DRAINS AND SERVICE CONDUITS ARE CONSTRUCTED. THE TRENCHES SHALL THEN BE EXCAVATED, AND THE EXCAVATED MATERIAL PLACED ON THE FOOTPATH AND NOT THE SUBGRADE.
    b. WHERE SUBSOIL DRAINS PASS UNDER SERVICE CONDUITS, THE SIDE DRAINS ARE TO BE DEEPENED AND GRADED OUT TO A NORMAL DEPTH AT A MINIMUM GRADE OF 1:250.
    c. IN DISPERSIVE, SOLUBLE OR FINE GRAINED SOILS, THE DEVELOPER'S REPRESENTATIVE IS TO EVALUATE WHETHER
       GEOFABRIC WRAPPED SUBSOIL DRAINS ARE REQUIRED. WHERE GEOFABRIC WRAPPED SUBSOIL DRAINS ARE PROPOSED THE DEVELOPER'S REPRESENTATIVE IS TO PROVIDE DETAILS FOR APPROVAL BY COUNCIL'S NOMINATED REPRESENTATIVE.
    d. ROAD SUBSOIL DRAINAGE MUST BE 'DAYLIGHTED' AND DISCHARGED TO AN APPROVED LEGAL POINT OF DISCHARGE. CAPS ARE TO BE PROVIDED TO UPSTREAM ENDS OF SUBSOIL DRAINS.
12. EACH PAVEMENT COURSE SHOULD NOT BE COMMENCED UNTIL THE PREVIOUS COURSE HAS BEEN INSPECTED AND APPROVED AND CERTIFIED BY THE CONSULTANT WITH RESPECT TO COMPACTION, FINISHED LEVELS AND TEXTURE OF FINISH. COMPACTION TESTS OF EACH LAYER ARE REQUIRED BEFORE PROCEEDING TO THE NEXT LAYER. ALL TEST RESULTS ARE TO BE PROVIDED TO COUNCIL'S NOMINATED REPRESENTATIVE PRIOR TO SURFACING.
13. SUBGRADE IS TO BE TRIMMED TO AN EVEN SURFACE FREE FROM LOOSE MATERIAL AND GRADED TO BE FREE-DRAINING. UNSUITABLE MATERIAL SUCH AS ORGANIC MATTER IS TO BE REMOVED. SUBGRADE AFFECTED BY RAINFALL AFTER FINAL TRIMMING SHALL NOT BE ACCEPTED UNTIL APPROPRIATE DRYING OUT TREATMENT HAS BEEN AFFECTED.
14. UNBOUND PAVEMENT COURSE MATERIAL IS TO BE PLACED ONLY ON UNDERLYING LAYERS MAINTAINED AT THE CORRECT MOISTURE CONTENT. PREPARED SUBGRADES AND PRECEDING LAYERS OF BASE COURSE SHALL BE MOISTENED IMMEDIATELY PRIOR TO SPREADING THE NEXT COURSE. PAVEMENT MATERIAL IS TO BE MAINTAINED AT THE SPECIFIED MOISTURE CONTENT PRIOR TO AND DURING SPREADING. THE LEADING EDGES OF THE PAVEMENT MATERIAL ARE TO BE KEPT MOIST. MINIMUM COMPACTED LAYER THICKNESS SHALL BE 100 MILLIMETRES AND MAXIMUM COMPACTED THICKNESS SHALL BE 150mm.
15. PRAM RAMPS TO BE CONSTRUCTED IN ACCORDANCE WITH MBRC STD DWG PC-2101A

CONCRETE PATHWAYS

CONCRETE PATHWAYS TO BE CONSTRUCTED IN ACCORDANCE WITH IPWEA STD DWG RS-065

PAVEMENT DEPTH VERIFICATION

PAVEMENT DEPTHS SHALL BE VERIFIED BY THE PROVISION OF AS CONSTRUCTED LEVELS OF THE SUBGRADE AND PRE-SEAL STAGE (OR TOP OF KERB IF INSTALLED) AT A FREQUENCY OF THREE (3) LEVELS (RIGHT HAND SIDE, CENTRE AND LEFT HAND SIDE) EVERY 50 METRES. THE SURVEYED INFORMATION IS TO BE PROVIDED IN A TABULATED FORMAT AND IS TO BE CERTIFIED BY BOTH THE SURVEYOR AND CONSULTING ENGINEER PROVIDED WITH ON MAINTENANCE SUBMISSION.

SUBGRADE TESTING

A DESIGN CALIFORNIA BEARING RATION (CBR) IS TO BE DETERMINED FOR EACH IDENTIFIABLE UNIT DEFINED ON THE BASIS OF TOPOGRAPHY, GEOLOGICAL AND DRAINAGE CONDITION OF THE SITE. THE FOUR DAY SOAKED CBR AT A COMPACTION OF 100% STANDARD COMPACTION IS TO BE THE STANDARD TEST. TESTS ARE TO BE CARRIED OUT IN A NATA REGISTERED LABORATORY (NATIONAL ASSOCIATION OF TESTING AUTHORITIES). THE SAMPLING IS TO BE RANDOMLY LOCATED WITHIN EACH LENGTH OF THE PROPOSED ROADWAY WITH CONSTANT SUBGRADE MATERIAL. IT IS REQUIRED THAT A MINIMUM OF 1 TEST PER MATERIAL TYPE BE CARRIED OUT. THE LOCATION OF MATERIAL TYPE VARIANCES ARE TO BE DETAILED IN ACCORDANCE WITH SAMPLE TEST AND ADJOINING LOT. THE SAMPLES SHALL BE TAKEN GENERALLY IN THE POSITION OF THE OUTER WHEEL PATH ON BOTH SIDES OF THE PROPOSED ROAD. A SKETCH PLAN SHOWING THE LOCATION OF ALL TESTS IS TO BE SUBMITTED WITH THE TEST RESULTS.

ACCESS ROUTES.

THE CONTRACTOR MAY BE REQUIRED, FROM TIME TO TIME, DURING THE PERIOD OF CONSTRUCTION, TO CLEAN THOSE PARTS OF THE ACCESS ROUTE TO THE SITE THAT MAY BE AFFECTED BY ANY MATERIAL DROPPED, DEPOSITED OR SPILLED ON THE ROADS AS A RESULT OF CONSTRUCTION PROCESSES ASSOCIATED WITH THE SITE. ALL CONSTRUCTION TRAFFIC TO THE SUBJECT PROPERTY SHALL BE ACCESSED VIA D'AGUILAR HIGHWAY AND CASH STREET.

DRIVEWAY NOTES:

ALL CONCRETE DRIVEWAYS ARE TO BE 3.0M. WIDE U.N.O., 125mm. THICK WITH F72 MESH, 50mm TOP COVER, ON A 75mm. THICK CBR15 GRAVEL BASE.
THE CONTRACTOR IS TO ENSURE THAT ALL SERVICE CONDUITS ARE IN PLACE BEFORE POURING THE DRIVEWAYS.
THE BACK OF KERB AND CHANNEL IS TO BE CUT DOWN AT ALL DRIVEWAY ENTRANCES.
THE EXACT LOCATION AND EXTENT OF THE DRIVEWAY WILL BE DETERMINED ON SITE BY THE SUPERVISING ENGINEER.

COMPACTION TESTING AND FREQUENCY

DETERMINATION OF THE COMPACTION PERFORMANCE OF THE SUBGRADE AND PAVEMENT GRAVEL MATERIALS -LABORATORY REFERENCE DENSITY, FIELD DENSITY, OPTIMUM MOISTURE CONTENT, FIELD MOISTURE CONTENT -SHALL BE CARRIED OUT IN ACCORDANCE WITH AS1289 METHODS OF TESTING SOILS FOR ENGINEERING PURPOSES, IN PARTICULAR THE E SERIES TESTS. THE LABORATORY REFERENCE DENSITY SHALL BE:

- NATURAL SUBGRADE - 100% STANDARD MAXIMUM DRY DENSITY (MDD)
- PAVEMENT UPPER AND LOWER SUB BASE LAYERS - 100% STANDARD MAXIMUM DRY DENSITY (MDD)
- PAVEMENT BASE LAYER - 100% STANDARD MAXIMUM DRY DENSITY (MDD)

THE MINIMUM FREQUENCY OF TESTING SHALL BE IN ACCORDANCE WITH COUNCIL'S PLANNING SCHEME POLICY OPERATIONAL WORKS INSPECTIONS, MAINTENANCE AND BONDING PROCEDURES. PLANNING SCHEME POLICY - INTEGRATED DESIGN - PAGE 45 OF 60.

A MINIMUM OF THREE (3) TESTS PER PROJECT WILL BE REQUIRED. A SKETCH PLAN SHOWING THE LOCATION OF THE TESTS IS TO BE SUBMITTED WITH THE RESULTS. ALL TESTS ARE TO BE DISTRIBUTED REASONABLY EVENLY THROUGH THE FULL DEPTH AND AREA OF PAVEMENT.

SURFACING

1. IN URBAN AND RURAL RESIDENTIAL AREAS, THE ASPHALTIC CONCRETE (A.C.) SURFACING THICKNESS IS TO BE:
   - 25mm (BCC TYPE 2) ON ACCESS TYPE STREETS AND LANEWAYS WITH TRAFFIC VOLUMES LESS THAN 4 X 105;
   - 50mm (BCC TYPE 3) FOR ARTERIAL AND SUB ARTERIAL ROADS; AND
   - 40mm (BCC TYPE 3) FOR ALL OTHER STREETS.

   IN COMMERCIAL AND INDUSTRIAL AREAS THE MINIMUM A.C. SURFACING THICKNESS IS TO BE 40mm.
2. WHERE STENCILED OR PATTERNED SURFACE TREATMENTS ARE PROPOSED AN ADDITIONAL 10mmSHALL BE ADDED TO THE DESIGN THICKNESS OF THE SURFACING. THE A.C. BINDER TYPE IS TO BE IN ACCORDANCE WITH AUSTROADS.
3. A.C. SURFACINGS ARE TO BE CONSTRUCTED IN ACCORDANCE WITH BRISBANE CITY COUNCIL STANDARDS (BCC S310 SUPPLY OF DENSE GRADED ASPHALT AND S320 LAYING OF ASPHALT).
4. PRIMERS SEALS ARE REQUIRED TO BE PLACED UNDER ALL ASPHALT SURFACES. PRIMER SEALS SHALL CONSIST OF CUTBACK BITUMEN (AMC4) OR BITUMEN EMULSION TO MAIN ROADS SPECIFICATION (MRTS 11 SPRAYED BITUMINOUS SURFACINGS EXCLUDING EMULSIONS) AND MRTS 12 SPRAYED BITUMINOUS EMULSION SURFACINGS) WITH 10MM AGGREGATE. WHERE CUTBACK BITUMEN IS USED THE MINIMUM CURING TIME BEFORE THE NEXT SEALED LAYER (ASPHALT) CAN BE PLACED WILL BE FOURTEEN (14) DAYS. WHERE BITUMEN EMULSION IS USED THE MINIMUM CURING TIME BEFORE THE NEXT SEALED LAYER (ASPHALT) CAN BE PLACED WILL BE FOUR (4) DAYS.
5. IN RURAL AREAS AND WHERE SPECIFIED, BITUMEN SPRAY SEAL SURFACING IS TO BE PROVIDED IN THE FORM OF A 2 COAT POLYMER SPRAY SEAL (14MM/7MM) IN ACCORDANCE WITH MAIN ROAD TECHNICAL SPECIFICATIONS (MRTS 18 POLYMER MODIFIED BINDERS, MRTS 11 SPRAYED BITUMINOUS SURFACINGS EXCLUDING EMULSIONS).

THE DEGREE OF SATURATION OF BASE COURSE PRIOR TO SURFACING IS TO BE LESS THAN 65%. TEST RESULTS DEMONSTRATING DEGREE OF SATURATION ARE TO BE PROVIDED TO COUNCIL'S NOMINATED REPRESENTATIVE AT THE PRESEAL INSPECTION AND AS A PART OF THE ON MAINTENANCE DOCUMENTATION.

PAVEMENT

1. THE ROAD PAVEMENT ADOPTED WILL BE DETERMINED BY THE ENGINEER AND APPROVED BY MORETON BAY REGIONAL COUNCIL. THIS PAVEMENT SHALL BE BASED ON SOIL TESTS TAKEN AT FORMATION LEVEL.
2. ANY VARIATIONS TO THE NOMINAL PAVEMENT THICKNESS WILL BE PAID AT THE RATES SHOWN IN THE PRICED SCHEDULE OF RATES.

TOPSOIL

1. ALL TOPSOIL ON ROADWORK AREAS SHALL BE STRIPPED AND STOCKPILED PRIOR TO THE COMMENCEMENT OF ANY ROADWORK OPERATIONS.
2. A TOPSOIL DEPTH OF 150mm. HAS BEEN USED TO DETERMINE TOPSOIL AND EARTHWORK QUANTITIES. THE CONTRACTOR IS TO SATISFY HIMSELF OF THE ACCURACY OF THESE QUANTITIES AND TO MAKE ANY NECESSARY ALLOWANCE IF HE DISAGREES WITH THEM.
3. A TOPSOIL RESPREAD DEPTH OF 250mm ON ALLOTMENTS HAS BEEN USED TO DETERMINE EARTHWORK QUANTITIES.

ROAD 3 (BRADMAN STREET & FLINDERS STREET) CONTROL LINE DETAILS

	PT	CHAINAGE	EASTING	NORTHING	BEARING	RAD/SPIRAL	A.LENGTH	DEFL.ANGLE
EXISTING STAGE 2	IP 1	0.000	480858.894	7014713.201	187°29'57.03"			
	TC	74.434	480849.180	7014639.404	187°29'57.03"			
	IP 2	86.215	480847.222	7014624.532		R = -15.000	23.562	90°00'00.00"
	CT	97.996	480862.094	7014622.574	97°29'57.03"			
STAGE 4	TC	196.535	480959.789	7014609.714	97°29'57.03"			
	IP 3	203.608	480966.861	7014608.783		R = -45.000	14.147	18°00'45.00"
	CT	210.682	480973.873	7014610.085	79°29'12.03"			
	TC	234.589	480997.380	7014614.447	79°29'12.03"			
	IP 4	245.192	481010.653	7014616.910		R = 13.500	21.206	90°00'00.00"
	CT	255.795	481013.116	7014603.637	169°29'12.03"			
	TC	278.295	481017.222	7014581.514	169°29'12.03"			
	IP 5	291.345	481019.623	7014568.577		R = 83.000	26.099	18°01'00.07"
	CT	304.395	481017.904	7014555.531	187°30'12.10"			
FUTURE STAGE 5	TC	396.875	481005.828	7014463.843	187°30'12.10"			
	IP 6	423.186	481001.453	7014430.629		R = 33.500	52.622	90°00'00.00"
	CT	449.497	480968.240	7014435.004	277°30'12.10"			
	TC	641.596	480777.786	7014460.089	277°30'12.10"			
	IP 7	652.593	480763.903	7014461.918		R = 14.000	21.994	90°00'44.90"
	CT	663.590	480765.735	7014475.800	7°30'57.00"			
EXISTING STAGE 3	TC	721.680	480773.333	7014533.392	7°30'57.00"			
	IP 8	732.678	480775.165	7014547.276		R = -14.000	21.995	90°00'59.97"
	CT	743.676	480761.281	7014549.103	277°29'57.03"			
	TC	863.314	480642.666	7014564.718	277°29'57.03"			
EXISTING STAGE 1	IP 9	874.309	480628.785	7014566.545		R = 14.000	21.991	90°00'00.00"
	CT	885.305	480630.613	7014580.425	7°29'57.03"			
	IP 10	943.305	480638.182	7014637.929				
	IP 11	947.459	480638.741	7014642.173		R = 14.000	8.308	34°00'07.78"
	IP 12	951.613	480641.577	7014645.379				
	IP 13	961.944	480648.423	7014653.116	41°30'02.74"			

ROAD 4 (BRADMAN STREET) CONTROL LINE DETAILS

	PT	CHAINAGE	EASTING	NORTHING	BEARING	RAD/SPIRAL	A.LENGTH	DEFL.ANGLE
EXISTING STAGE 3	IP 1	0.000	480772.491	7014540.324	68°38'02.13"			
	TC	11.397	480783.105	7014544.476	68°38'02.13"			
	IP 2	14.924	480786.461	7014545.789		R = 14.000	7.053	28°51'54.91"
	CT	18.450	480790.033	7014545.318	97°29'57.03"			
STAGE 4	IP 3	243.037	481012.699	7014516.007	97°29'57.03"			

ROAD 5 (ILLAWARRA PLACE) CONTROL LINE DETAILS

PT	CHAINAGE	EASTING	NORTHING	BEARING	RAD/SPIRAL	A.LENGTH	DEFL.ANGLE
IP 1	0.000	481010.360	7014609.638	51°10'17.14"			
TC	11.304	481019.166	7014616.725	51°10'17.14"			
IP 2	14.887	481022.015	7014619.019		R = 14.500	7.166	28°18'54.89"
CT	18.470	481025.611	7014619.686	79°29'12.03"			
TC	20.680	481027.785	7014620.089	79°29'12.03"			
IP 3	23.805	481030.874	7014620.663		R = 24.000	6.249	14°55'07.86"
CT	26.929	481034.007	7014620.421	94°24'19.89"			
IP 4	43.208	481050.238	7014619.171	94°24'19.89"			

DIAL BEFORE YOU DIG www.1100.com.au The Essential First Step

NORTH:

SCALE: NOT TO SCALE — THIS SCALE SHOWN IS ORIGINAL DRAWING SCALE: A1
DO NOT SCALE FROM THIS DRAWING - USE ONLY DIMENSIONS PROVIDED - IF IN DOUBT PLEASE ENQUIRE

APPROVED — FOR AND ON BEHALF OF JFP URBAN CONSULTANTS PTY LTD
☐ T.McKINNEY RPEQ 5087 ☐ A.FRASER RPEQ 5691 ☐ J.PAPPAS RPEQ 6086 ☐ S.MARSH RPEQ 8068 ☑ H.WATSON RPEQ 6200

DESIGNED CDV | DRAWN WN | CHECKED PNH | DATUM: AHD

ISSUE: A — ISSUE FOR OPERATIONAL WORKS APPROVAL — 23/08/22 CDV
ISSUE: DETAILS: DATE: INIT:

TITLE: ROADWORKS NOTES
DFC (PROJECT MANAGEMENT) PTY LTD
'ARCHERS WAY' ESTATE - STAGE 4
AT 22-80 CASH STREET, D'AGUILAR

DETAILS: JOB NO: M2584E_4 | PLAN: R02 | ISSUE: A
MORETON BAY REGIONAL COUNCIL REF: DA/38032/2019/V3VR
FILE NAME: ROADWORKS.DWG

JFP URBAN CONSULTANTS
BRISBANE - SUNSHINE COAST - CENTRAL QLD
BRISBANE
JFP House - 76 Ernest Street,
South Brisbane Qld 4101
P 07 3012 0100 W www.jfp.com.au
JFP URBAN CONSULTANTS PTY. LTD. A.C.N. 050 414 045
PLANNERS
URBAN DESIGNERS
SURVEYORS
ENGINEERS
LANDSCAPE ARCHITECTS

COPYRIGHT © 2011 JFP URBAN CONSULTANTS PTY LTD THIS DOCUMENT MAY NOT BE COPIED OR TRANSMITTED IN ANY FORM OR BY ANY MEANS IN PART OR IN WHOLE WITHOUT THE WRITTEN PERMISSION OF JFP URBAN CONSULTANTS PTY LTD.

Document Set ID: 66908359
Version: 1, Version Date: 09/05/2023
Moreton Bay Regional Council
Approved subject to conditions of Decision Notice DA/2023/0531
09/05/2023

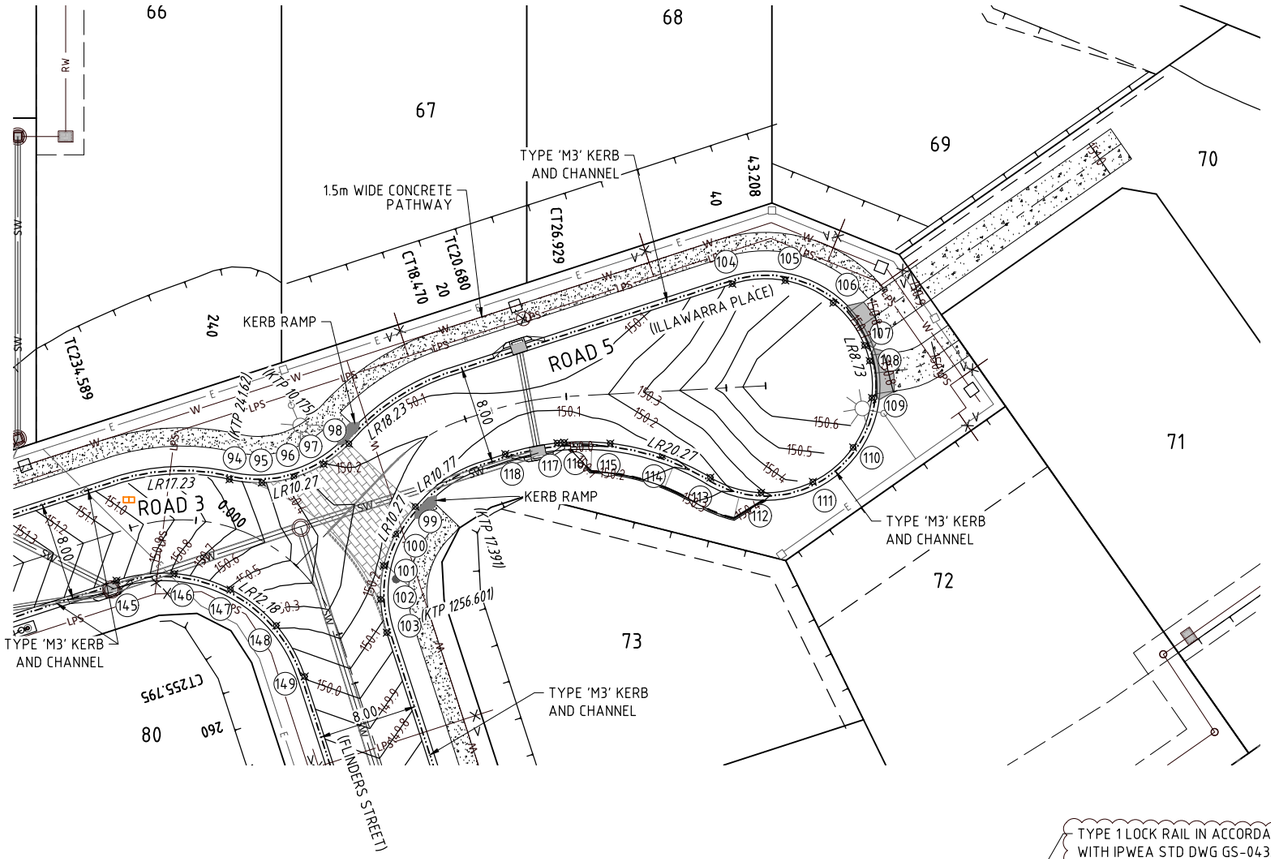

LIP OF KERB SETOUT TABLE - ROAD 5 (ILLAWARRA PLACE)

PT No.	TYPE	EASTING	NORTHING	LEVEL
104	KTP	481055.389	7014629.006	150.662
105	KTP	481059.538	7014630.247	150.776
106	KTP	481063.329	7014632.340	150.876
107	KTP	481066.589	7014635.193	150.962
108	KTP	481069.169	7014638.672	151.034
109	KTP	481072.208	7014641.739	151.092
110	KTP	481076.344	7014642.975	151.135
111	KTP	481080.567	7014642.077	151.164
112	KTP	481083.844	7014639.265	151.179
113	KTP	481084.894	7014637.254	151.181
114	KTP	481085.372	7014635.227	151.179
115	KTP	481084.779	7014630.951	151.165
116	KTP	481082.208	7014627.482	151.137
117	KTP	481078.290	7014625.668	151.094
118	KTP	481072.905	7014624.669	151.020
119	KTP	481067.519	7014623.670	150.923
120	KTP	481062.134	7014622.670	150.804
121	KTP	481056.750	7014621.671	150.662

LIP OF KERB - ROAD 3 (FLINDERS STREET WIDENING

PT No.	TYPE	EASTING	NORTHING	LEVEL
145	TP	480995.686	7014610.339	151.025
146	IP	481000.440	7014610.278	150.780
147	IP	481004.808	7014608.402	150.487
148	IP	481008.127	7014604.998	150.215
149	TP	481009.889	7014600.582	150.010

LEGEND:

- PAVEMENT CONTOURS
- PROPOSED KERB AND CHANNEL
- PROPOSED STORMWATER
- SEWERAGE
- WATER MAIN
- LOW PRESSURE SEWERAGE MAIN
- EXISTING KERB AND CHANNEL
- EXISTING U/G ELECTRICAL
- TELSTRA
- THRESHOLD PAVEMENT TREATMENT
- KERB TRANSITION
- KERB RAMP
- BOLLARDS @ 1.5m CENTRES

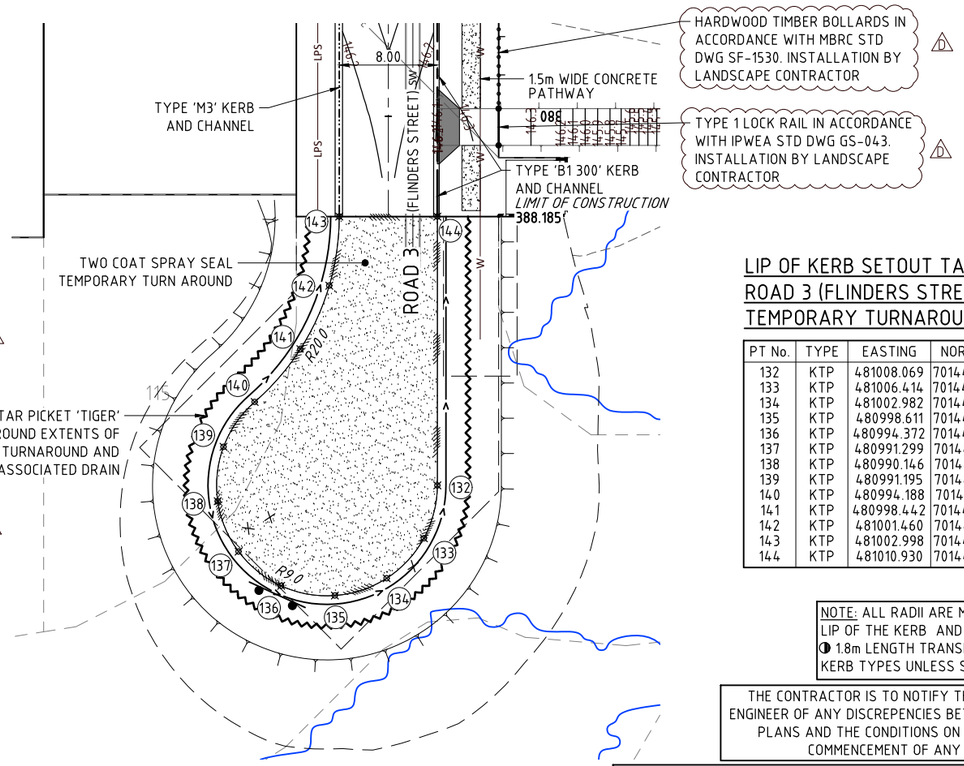

LIP OF KERB SETOUT TABLE - ROAD 3 (FLINDERS STREET) TEMPORARY TURNAROUND

PT No.	TYPE	EASTING	NORTHING	LEVEL
132	KTP	481008.069	7014450.224	146.053
133	KTP	481006.414	7014446.092	146.053
134	KTP	481002.982	7014443.258	146.053
135	KTP	480998.611	7014442.416	146.053
136	KTP	480994.372	7014443.770	146.053
137	KTP	480991.299	7014446.991	146.053
138	KTP	480990.146	7014451.290	146.053
139	KTP	480991.195	7014455.616	146.053
140	KTP	480994.188	7014458.911	146.053
141	KTP	480998.442	7014462.689	146.053
142	KTP	481001.460	7014467.512	146.053
143	KTP	481002.998	7014472.990	146.053
144	KTP	481010.930	7014471.946	146.052

TEMPORARY TURNAROUND DETAIL

SCALE 1:250

LIP OF KERB SETOUT TABLE - ROAD 3 (FLINDERS STREET) AND ROAD 4 (BRADMAN STREET)

PT No.	TYPE	EASTING	NORTHING	LEVEL
122	KTP	481007.172	7014502.613	146.432
123	KTP	481006.910	7014506.612	146.493
124	KTP	481005.138	7014510.206	146.517
125	KTP	481002.125	7014512.848	146.502
126	KTP	480998.330	7014514.136	146.451

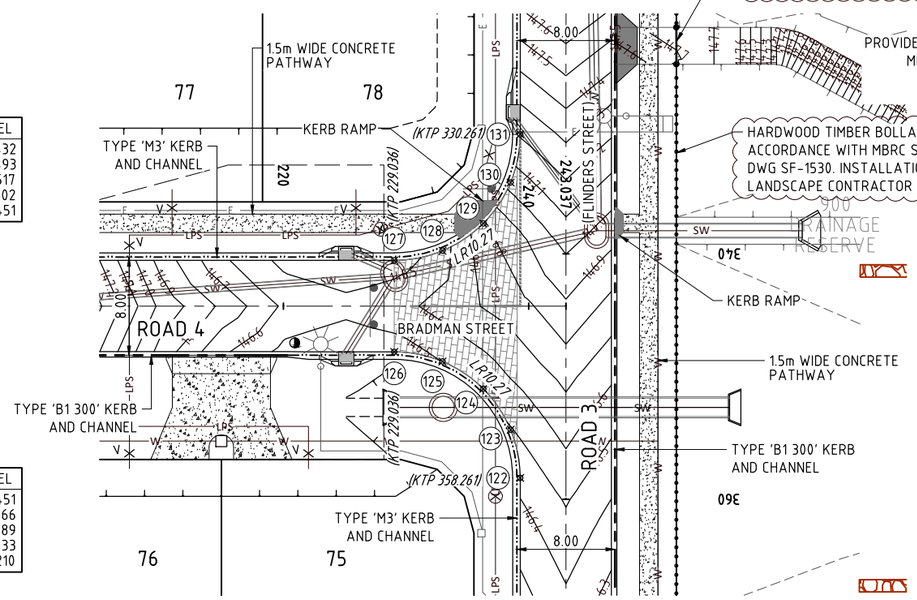

LIP OF KERB SETOUT TABLE - ROAD 4 (BRADMAN STREET) AND ROAD 3 (FLINDERS STREET)

PT No.	TYPE	EASTING	NORTHING	LEVEL
127	KTP	480999.306	7014521.532	146.451
128	KTP	481003.304	7014521.794	146.566
129	KTP	481006.898	7014523.567	146.789
130	KTP	481009.540	7014526.579	147.033
131	KTP	481010.829	7014530.373	147.210

NOTE: ALL RADII ARE MEASURED TO THE LIP OF THE KERB AND CHANNEL.
◑ 1.8m LENGTH TRANSITION BETWEEN KERB TYPES UNLESS SHOWN OTHERWISE.

THE CONTRACTOR IS TO NOTIFY THE SUPERVISING ENGINEER OF ANY DISCREPENCIES BETWEEN THE DESIGN PLANS AND THE CONDITIONS ON SITE PRIOR TO COMMENCEMENT OF ANY WORK.

EXISTING SERVICES LOCATIONS

THE DESIGN DETAILED ON THIS PLAN HAS BEEN PREPARED BASED ON SERVICE AUTHORITY AS CONSTRUCTED INFORMATION.
SOME POTHOLING HAS BEEN UNDERTAKEN TO VERIFY EXISTING SERVICES LOCATIONS AND DEPTHS.
IT IS THE CONTRACTORS RESPONSIBILITY TO UNDERTAKE POT HOLING (HYDROVAC EXCAVATION) PRIOR TO COMMENCEMENT OF CONSTRUCTION.

DIAL BEFORE YOU DIG www.1100.com.au The Essential First Step

JFP URBAN CONSULTANTS
BRISBANE - SUNSHINE COAST - CENTRAL QLD
BRISBANE
JFP House - 76 Ernest Street,
South Brisbane Qld 4101
P 07 3012 0100 W www.jfp.com.au
JFP URBAN CONSULTANTS PTY. LTD. A.C.N. 050 414 045
PLANNERS
URBAN DESIGNERS
SURVEYORS
ENGINEERS
LANDSCAPE ARCHITECTS

NORTH: N

SCALE: 1:250 A1
THIS SCALE SHOWN IS ORIGINAL DRAWING SCALE
0 2.5 5 7.5 10 12.5 (A1) 1:250 25 Metres
(A3) 1:500
DO NOT SCALE FROM THIS DRAWING - USE ONLY DIMENSIONS PROVIDED - IF IN DOUBT PLEASE ENQUIRE

APPROVED
FOR AND ON BEHALF OF JFP URBAN CONSULTANTS PTY LTD
☐ T.McKINNEY RPEQ 5087 ☐ A.FRASER RPEQ 5691 ☐ J.PAPPAS RPEQ 6086
☐ S.MARSH RPEQ 8068 ☑ H.WATSON RPEQ 6200

DESIGNED	CDV
DRAWN	WN
CHECKED	PNH
DATUM: AHD	

ISSUE:

ISSUE:	DETAILS:	DATE:	INIT:
D	TIMBER BOLLARDS AND LOCK RAIL ADDED	17/04/23	FR
C	INFORMATION REQUEST AMENDMENTS	03/04/23	CDV
B	ELECTRICAL TRANSFORMER ADDED	10/02/23	FR
A	ISSUE FOR OPERATIONAL WORKS APPROVAL	23/08/22	CDV

TITLE:
ROADWORKS INTERSECTION DETAILS PLAN - SHEET 1 OF 2
DFC (PROJECT MANAGEMENT) PTY LTD
'ARCHERS WAY' ESTATE - STAGE 4
AT 22-80 CASH STREET, D'AGUILAR

DENNIS FAMILY CORPORATION

DETAILS:
JOB NO: M2584E_4
PLAN: R03 ISSUE: D
MORETON BAY REGIONAL COUNCIL REF: DA/38032/2019/V3VR
FILE NAME: INTERSECTION.DWG

COPYRIGHT © 2011 JFP URBAN CONSULTANTS PTY LTD THIS DOCUMENT MAY NOT BE COPIED OR TRANSMITTED IN ANY FORM OR BY ANY MEANS IN PART OR IN WHOLE WITHOUT THE WRITTEN PERMISSION OF JFP URBAN CONSULTANTS PTY LTD.

17/04/2023 N:\M2584\STAGE_4\DESIGN\WORKING\DRAWINGS\INTERSECTION

Document Set ID: 66908359
Version: 1, Version Date: 09/05/2023
Moreton Bay Regional Council
Approved subject to conditions of Decision Notice DA/2023/0531
09/05/2023

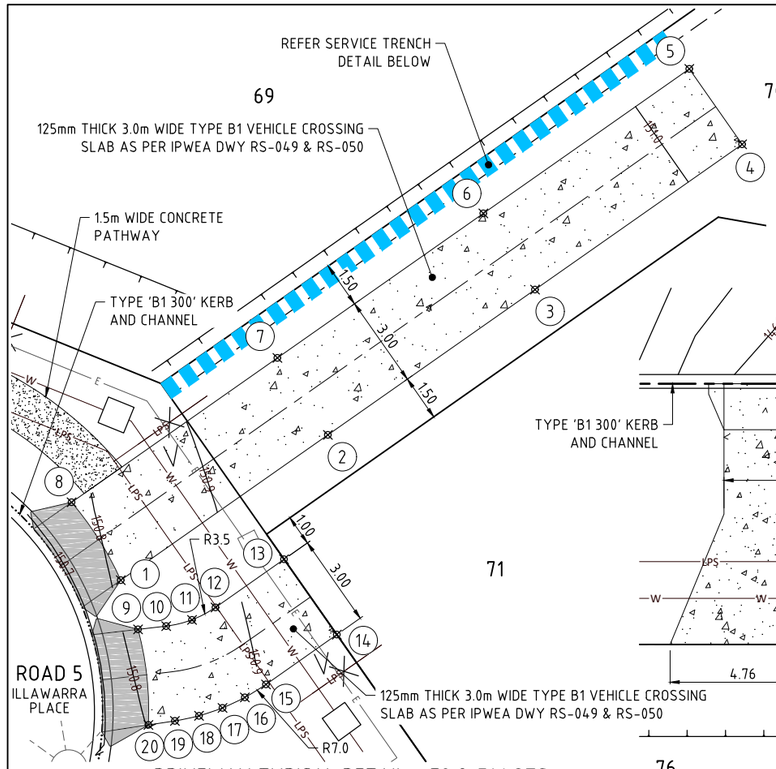

DRIVEWAY TYPICAL DETAIL - 70 & 71 LOTS

SCALE 1:100

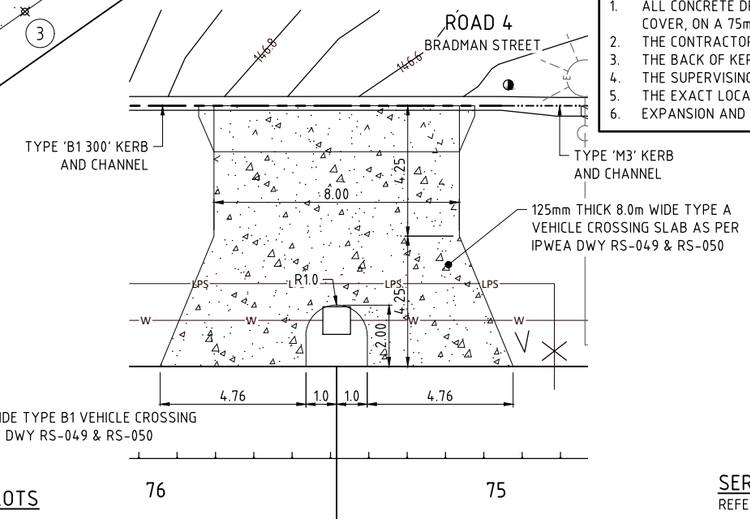

DRIVEWAY TYPICAL DETAIL - 75 & 76 LOTS

SCALE 1:100

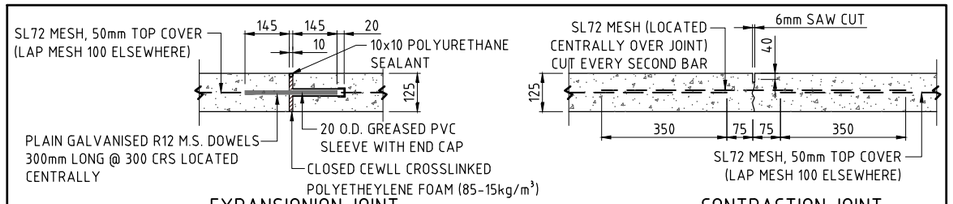

EXPANSIONION JOINT

(16m CENTRES MAXIMUM)

CONTRACTION JOINT

(4m CENTRES MAXIMUM)

CONCRETE DRIVEWAYS TO SINGLE LOTS DETAILS

1. ALL CONCRETE DRIVEWAYS TO SINGLE LOTS ARE TO BE 3.0m WIDE U.N.O, GRADE N25 CONCRETE, 125mm THICK WITH SL72 MESH, 50mm TOP COVER, ON A 75mm CBR 15 GRAVEL BASE.
2. THE CONTRACTOR IS TO ENSURE THAT ALL SERVICE CONDUITS ARE IN PLACE BEFORE POURING THE DRIVEWAYS.
3. THE BACK OF KERB AND CHANNEL IS TO BE CUT DOWN AT ALL DRIVEWAY ENTRANCES. FOR DETAILS SEE MBRC STD DWGS RS-049 & RS 050
4. THE SUPERVISING ENGINEER IS TO BE NOTIFIED PRIOR TO POURING CONCRETE FOR INSPECTION OF PLACED MESH
5. THE EXACT LOCATION AND EXTENT OF THE DRIVEWAY WILL BE DETERMINED ON SITE BY THE SUPERVISING ENGINEER.
6. EXPANSION AND CONTRACTION JOINTS TO BE CONSTRUCTED IN ACCORDANCE WITH ABOVE DETAILS.

LEGEND:

- PAVEMENT CONTOURS (15.2)
- PROPOSED KERB AND CHANNEL
- PROPOSED STORMWATER (SW)
- SEWERAGE (S)
- WATER MAIN (W)
- LOW PRESSURE SEWERAGE MAIN (LPS)
- EXISTING KERB AND CHANNEL
- EXISTING U/G ELECTRICAL (E)
- TELSTRA (T)
- THRESHOLD PAVEMENT TREATMENT
- KERB TRANSITION
- KERB RAMP
- BOLLARDS @ 1.5m CENTRES

EXISTING SERVICES LOCATIONS

THE DESIGN DETAILED ON THIS PLAN HAS BEEN PREPARED BASED ON SERVICE AUTHORITY AS CONSTRUCTED INFORMATION. SOME POTHOLING HAS BEEN UNDERTAKEN TO VERIFY EXISTING SERVICES LOCATIONS AND DEPTHS. IT IS THE CONTRACTORS RESPONSIBILITY TO UNDERTAKE POT HOLING (HYDROVAC EXCAVATION) PRIOR TO COMMENCEMENT OF CONSTRUCTION.

THE CONTRACTOR IS TO NOTIFY THE SUPERVISING ENGINEER OF ANY DISCREPENCIES BETWEEN THE DESIGN PLANS AND THE CONDITIONS ON SITE PRIOR TO COMMENCEMENT OF ANY WORK.

NOTE: ALL RADII ARE MEASURED TO THE LIP OF THE KERB AND CHANNEL.
◑ 1.8m LENGTH TRANSITION BETWEEN KERB TYPES UNLESS SHOWN OTHERWISE.

TREE LEGEND

TREES TO BE RETAINED AND PROTECTED

TREES TO BE RETAINED AND REQUIRES THE SUPERVISION OF ANY EXCAVATION OR SERVICES WORKS WITHIN THE HATCHED PROTECTION ZONE BY AN ARBORIST ON SITE.

TPZ
Tree Protection Zone
All vegetation to be protected in accordance with AS4970 - Protection of Trees on Development Sites & any conditions of approval.

SERVICE TRENCH TYPE LEGEND:

REFER SERVICE TRENCH DETAILS ON DWG R##

- TYPE 'A1'
- TYPE 'B1'
- TYPE 'B2'
- TYPE 'C1'
- TYPE 'C2'

SETOUT AND LEVEL TABLE - DRIVEWAY LOTS 70

PT No.	TYPE	EASTING	NORTHING	LEVEL
1	IP	481060.302	7014622.165	150.808
2	IP	481067.618	7014625.979	150.928
3	IP	481074.935	7014629.794	150.969
4	IP	481082.251	7014633.609	151.011
5	IP	481080.864	7014636.269	151.011
6	IP	481073.591	7014632.477	150.970
7	IP	481066.317	7014628.684	150.929
8	IP	481059.043	7014624.891	150.782

SETOUT AND LEVEL TABLE - DRIVEWAY LOTS 71

PT No.	TYPE	EASTING	NORTHING	LEVEL
9	IP	481060.582	7014617.371	150.813
10	IP	481061.453	7014617.387	150.835
11	IP	481062.258	7014617.449	150.858
12	IP	481063.049	7014617.604	150.878
13	IP	481063.818	7014617.848	150.942
14	IP	481064.554	7014618.179	150.970
15	IP	481067.060	7014619.486	150.905
16	IP	481065.673	7014622.146	150.886
17	IP	481063.251	7014620.883	150.866
18	IP	481062.438	7014620.580	150.846
19	IP	481061.576	7014620.487	150.825
20	IP	481060.653	7014620.502	150.802

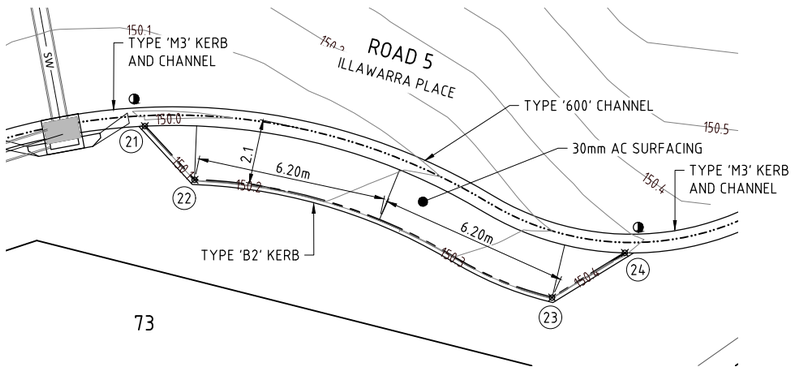

CARPARK SETOUT AND LEVEL TABLE

PT No.	TYPE	EASTING	NORTHING	LEVEL
21	IP	481033.826	7014616.082	150.014
22	IP	481035.202	7014614.133	150.054
23	IP	481046.267	7014608.805	150.275
24	IP	481048.641	7014609.972	150.293

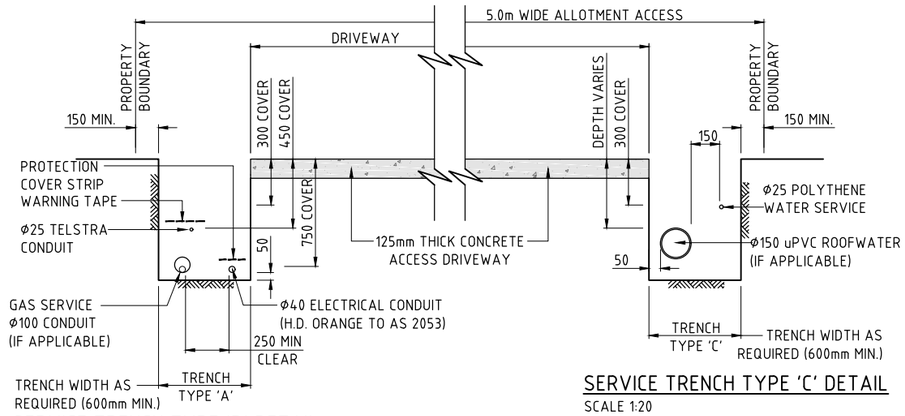

SERVICE TRENCH TYPE 'B' DETAIL

SCALE 1:20

SERVICE TRENCH TYPE 'C' DETAIL

SCALE 1:20

DIAL BEFORE YOU DIG
www.1100.com.au
The Essential First Step

JFP URBAN CONSULTANTS
BRISBANE - SUNSHINE COAST - CENTRAL QLD
BRISBANE
JFP House - 76 Ernest Street,
South Brisbane Qld 4101
P 07 3012 0100 W www.jfp.com.au
JFP URBAN CONSULTANTS PTY. LTD. A.C.N. 050 414 045
PLANNERS
URBAN DESIGNERS
SURVEYORS
ENGINEERS
LANDSCAPE ARCHITECTS

NORTH: N

SCALE: 1:100 A1

THIS SCALE SHOWN IS ORIGINAL DRAWING SCALE
0 1 2 3 4 5 (A1) 1:100 10 Metres
(A3) 1:200

DO NOT SCALE FROM THIS DRAWING - USE ONLY DIMENSIONS PROVIDED - IF IN DOUBT PLEASE ENQUIRE

APPROVED
FOR AND ON BEHALF OF JFP URBAN CONSULTANTS PTY LTD
T.McKINNEY RPEQ 5087
A.FRASER RPEQ 5691
J.PAPPAS RPEQ 6086
S.MARSH RPEQ 8068
H.WATSON RPEQ 6200

DESIGNED	CDV
DRAWN	WN
CHECKED	PNH
DATUM: AHD	

ISSUE:	DETAILS:	DATE:	INIT:
A	ISSUE FOR OPERATIONAL WORKS APPROVAL	23/08/22	CDV

TITLE:

ROADWORKS DRIVEWAY DETAILS PLAN - SHEET 2 OF 2

DFC (PROJECT MANAGEMENT) PTY LTD

'ARCHERS WAY' ESTATE - STAGE 4
AT 22-80 CASH STREET, D'AGUILAR

DENNIS FAMILY CORPORATION

DETAILS:
JOB NO: M2584E_4
PLAN: R04
ISSUE: A
MORETON BAY REGIONAL COUNCIL REF: DA/38032/2019/V3VR
FILE NAME: INTERSECTION.DWG

COPYRIGHT © 2011 JFP URBAN CONSULTANTS PTY LTD THIS DOCUMENT MAY NOT BE COPIED OR TRANSMITTED IN ANY FORM OR BY ANY MEANS IN PART OR IN WHOLE WITHOUT THE WRITTEN PERMISSION OF JFP URBAN CONSULTANTS PTY LTD.

Document Set ID: 66908357
Version: 1, Version Date: 09/05/2023
Moreton Bay Regional Council
Approved subject to conditions of Decision Notice DA/2023/0531
09/05/2023

NOTES:

ASSUMED TOPSOIL DEPTH 150mm

ULTIMATE PAVEMENT DEPTHS ARE DETERMINED BY SOIL TESTS TAKEN AT FORMATION LEVEL.

ESA's $1.2x10^5$
"LIVING RESIDENTIAL" - ACCESS STREET

NOMINAL PAVEMENT
CH **105.596** TO CH **385.738**
30mm AC (BCC TYPE 2)
125mm BASE COURSE (TYPE 2.1)
215mm SUB-BASE COURSE (TYPE 2.3)

✳ REFER INTERSECTION DETAILS FOR LIP OF KERB LEVELS ON DWG No. **M2584E_4 R03**

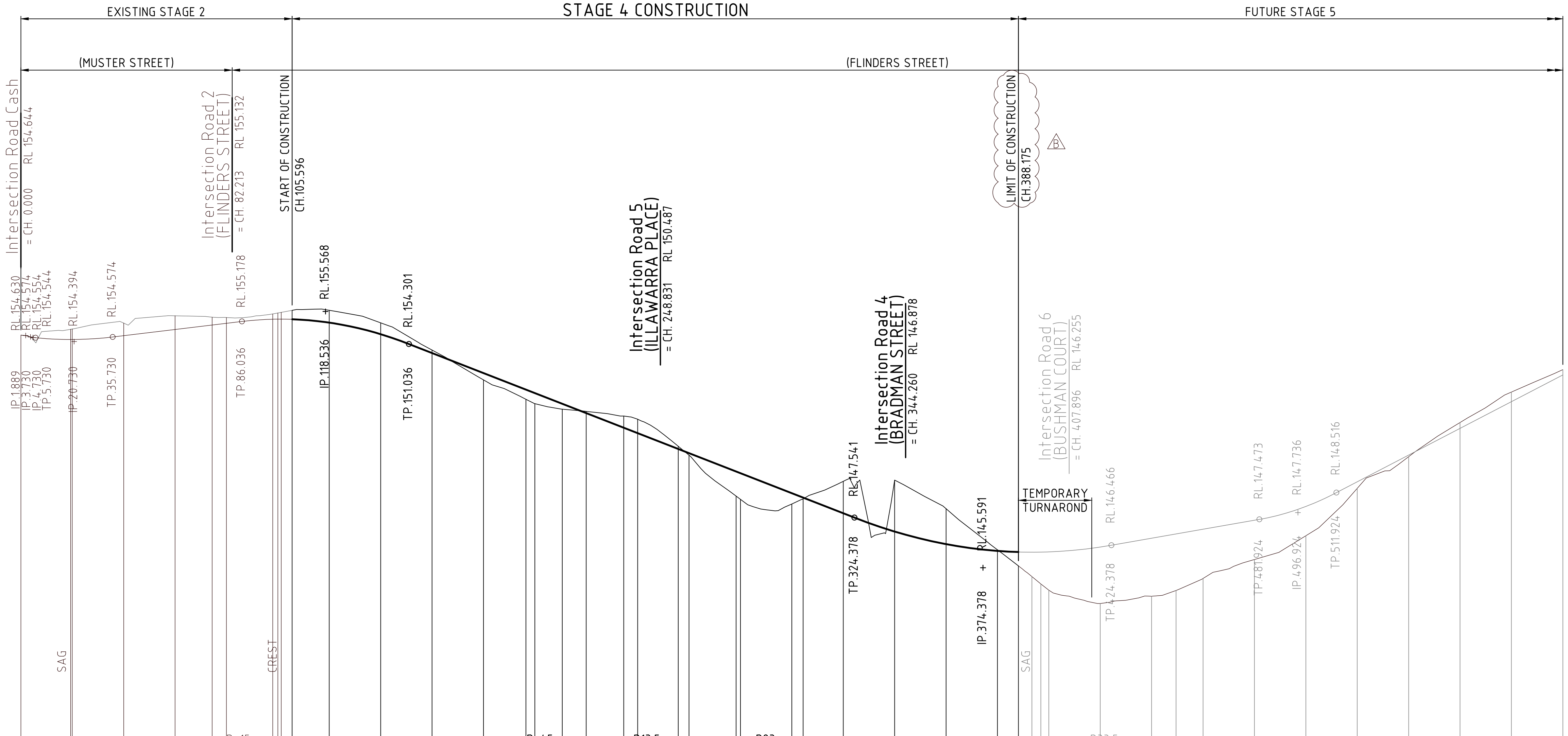

HORIZ. CURVE DATA: R-15m, R-45m, R13.5m, R83m, R33.5m

V.C.LENGTH (m) / RADIUS OF CURVATURE: 30VC R1364; 65VC R1275; 100VC R1770; 30VC R870

TANGENT GRADE (%) / DISTANCE IP-IP: -3 % 1.889 m; -0.748 % 1.841 m; -2 % 1 m; -1 % 16 m; 1.2 % 97.805 m; -3.9 % 255.842 m; 1.75 % 122.546 m; 5.2 % 133.342 m

DATUM R.L.134.0

PEGGED CHAINAGE ALONG CONTROLLINE	LHS LIP OF KERB LEVELS	RHS LIP OF KERB LEVELS	CUT (-ve) FILL	PAVEMENT LEVELS ALONG CONTROLLINE	SURFACE LEVELS ALONG CONTROLLINE
0.000	✳	✳	0.000	154.644	154.644
19.367	154.364	154.364	-0.398	154.476	154.874
20.000	154.364	154.364	-0.409	154.476	154.885
40.000	154.514	154.514	-0.492	154.626	155.117
60.000	154.754	154.754	-0.534	154.866	155.400
74.434	154.927	154.927	-0.307	155.039	155.346
80.000	154.994	✳	-0.226	155.106	155.332
97.996	155.153	155.153	-0.207	155.265	155.473
100.000	155.157	155.157	-0.241	155.269	155.510
101.331	155.158	155.158	-0.265	155.270	155.534
105.596					
120.000	155.021	155.021	-0.480	155.133	155.613
140.000	154.571	154.571	-0.443	154.683	155.126
160.000	153.839	153.839	-0.114	153.951	154.065
180.000	153.059	153.059	0.268	153.171	152.903
196.535	152.415	152.415	0.380	152.526	152.147
200.000	152.279	152.279	0.413	152.391	151.978
210.682	151.863	151.863	0.210	151.975	151.765
220.000	151.499	151.499	-0.066	151.611	151.677
234.589	150.931	150.931	-0.452	151.042	151.495
240.000	150.720	150.720	-0.544	150.831	151.375
255.795	✳	150.104	-0.106	150.216	150.322
260.000	149.940	149.940	0.081	150.052	149.971
278.295	149.226	149.226	0.957	149.338	148.381
280.000	149.160	149.160	1.018	149.272	148.254
300.000	148.381	148.380	0.420	148.492	148.072
304.395	148.209	148.209	0.049	148.320	148.272
320.000	147.601	147.600	-1.242	147.712	148.954
340.000	146.890	✳	-1.997	147.001	148.998
360.000	146.400	146.399	-1.382	146.511	147.892
380.000	146.135	146.134	-0.043	146.246	146.289
388.175					
393.404	146.084	146.083	0.949	146.195	145.247
396.875	146.088	146.087	1.237	146.199	144.961
400.000	✳	146.096	1.489	146.208	144.719
420.000	146.284	146.283	2.197	146.395	144.198
440.000	146.628	146.628	2.257	146.740	144.483
449.497	146.794	146.794	2.198	146.906	144.708
460.000	146.978	146.978	1.913	147.090	145.177
480.000	147.328	147.328	1.528	147.440	145.912
500.000	147.866	147.866	1.140	147.977	146.838
520.000	148.824	148.824	0.254	148.936	148.682
540.000	149.864	149.864	0.063	149.976	149.913
560.000	150.904	150.904	-0.229	151.016	151.245
580.000	151.944	151.944	-0.374	152.056	152.430
600.000	152.984	152.984	-0.209	153.096	153.305

LONGITUDINAL SECTION - ROAD 3 (MUSTER STREET & FLINDERS STREET)

("LIVING RESIDENTIAL" - ACCESS STREET CH105.596 - 385.738)

DIAL BEFORE YOU DIG www.1100.com.au The Essential First Step

JFP URBAN CONSULTANTS
BRISBANE - SUNSHINE COAST - CENTRAL QLD
BRISBANE
JFP House - 76 Ernest Street,
South Brisbane Qld 4101
P 07 3012 0100 W www.jfp.com.au
JFP URBAN CONSULTANTS PTY. LTD. A.C.N. 050 414 045
PLANNERS / URBAN DESIGNERS / SURVEYORS / ENGINEERS / LANDSCAPE ARCHITECTS

NORTH:

SCALE: Horizontal 1:1000 Vertical 1:100 — A1 — THIS SCALE SHOWN IS ORIGINAL DRAWING SCALE — (A1) 1:100 0 1 2 3 4 5 10 Metres; (A1) 1:1000 0 10 20 30 40 50 100
DO NOT SCALE FROM THIS DRAWING - USE ONLY DIMENSIONS PROVIDED - IF IN DOUBT PLEASE ENQUIRE

APPROVED — FOR AND ON BEHALF OF JFP URBAN CONSULTANTS PTY LTD
☐ T.M^C KINNEY RPEQ 5087 ☐ A.FRASER RPEQ 5691 ☐ J.PAPPAS RPEQ 6086 ☐ S.MARSH RPEQ 8068 ☑ H.WATSON RPEQ 6200

DESIGNED CDV / DRAWN WN / CHECKED PNH / DATUM: AHD

ISSUE:	DETAILS:	DATE:	INIT:
C	INFORMATION REQUEST AMENDMENTS	03/04/23	CDV
B	ELECTRICAL TRANSFORMER	30/02/23	FR
A	ISSUE FOR OPERATIONAL WORKS APPROVAL	23/08/22	CDV

TITLE:
ROADWORKS LONGITUDINAL SECTION - ROAD 3 (FLINDERS STREET)

DFC (PROJECT MANAGEMENT) PTY LTD
'ARCHERS WAY' ESTATE - STAGE 4
AT 22-80 CASH STREET, D'AGUILAR

DENNIS FAMILY CORPORATION

DETAILS: JOB NO: M2584E_4 PLAN: R05 ISSUE: C
MORETON BAY REGIONAL COUNCIL REF: DA/38032/2019/V3VR
FILE NAME: ROADWORKS SECTIONS.DWG

6/04/2023 N:\M2584\STAGE_4\DESIGN\WORKING DRAWINGS\ROADWORKS SECTIONS

COPYRIGHT © 2011 JFP URBAN CONSULTANTS PTY LTD THIS DOCUMENT MAY NOT BE COPIED OR TRANSMITTED IN ANY FORM OR BY ANY MEANS IN PART OR IN WHOLE WITHOUT THE WRITTEN CONSENT OF JFP URBAN CONSULTANTS PTY LTD.

Moreton Bay Regional Council
Document Set ID: 66908359
Version: 1, Version Date: 09/05/2023
Approved subject to conditions of Decision Notice DA/2023/0531 09/05/2023

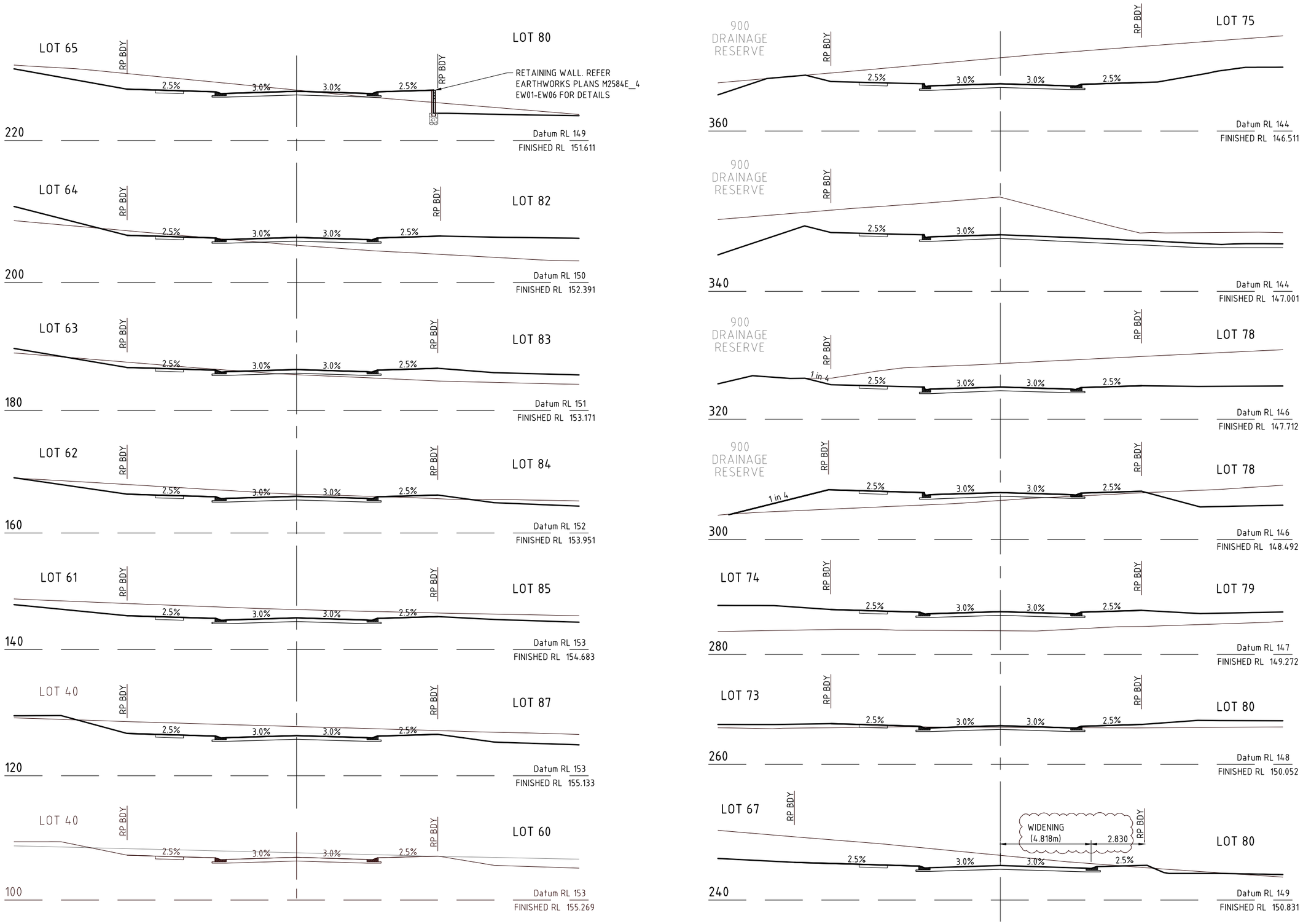

NORTH:

SCALE:

Horizontal 1:1000
Vertical 1:100
A1

THIS SCALE SHOWN IS ORIGINAL DRAWING SCALE

0 1 2 3 4 5 (A1) 1:100 10 Metres
0 10 20 30 40 50 (A1) 1:1000 100

DO NOT SCALE FROM THIS DRAWING - USE ONLY DIMENSIONS PROVIDED - IF IN DOUBT PLEASE ENQUIRE

APPROVED
FOR AND ON BEHALF OF JFP URBAN CONSULTANTS PTY LTD

☐ T.McKINNEY RPEQ 5087
☐ A.FRASER RPEQ 5691
☐ J.PAPPAS RPEQ 6086
☐ S.MARSH RPEQ 8068
☑ H.WATSON RPEQ 6200

DESIGNED	CDV
DRAWN	WN
CHECKED	PNH
DATUM: AHD	

ISSUE:

ISSUE:	DETAILS:	DATE:	INIT:
B	INFORMATION REQUEST AMENDMENTS	03/04/23	CDV
A	ISSUE FOR OPERATIONAL WORKS APPROVAL	23/08/22	CDV

TITLE:

ROADWORKS CROSS SECTIONS - ROAD 3 (FLINDERS STREET) - SHEET 1 of 2

DFC (PROJECT MANAGEMENT) PTY LTD

'ARCHERS WAY' ESTATE - STAGE 4
AT 22-80 CASH STREET, D'AGUILAR

DENNIS FAMILY CORPORATION

DETAILS:

JOB NO: M2584E_4
PLAN: R06
ISSUE: B

MORETON BAY REGIONAL COUNCIL REF: DA/38032/2019/V3VR

FILE NAME: ROADWORKS SECTIONS.DWG

JFP URBANCONSULTANTS
BRISBANE - SUNSHINE COAST - CENTRAL QLD
BRISBANE
JFP House - 76 Ernest Street,
South Brisbane Qld 4101
P 07 3012 0100 W www.jfp.com.au
JFP URBAN CONSULTANTS PTY. LTD. A.C.N. 050 414 045
PLANNERS
URBAN DESIGNERS
SURVEYORS
ENGINEERS
LANDSCAPE ARCHITECTS

COPYRIGHT © 2011 JFP URBAN CONSULTANTS PTY LTD THIS DOCUMENT MAY NOT BE COPIED OR TRANSMITTED IN ANY FORM OR BY ANY MEANS IN PART OR IN WHOLE WITHOUT THE WRITTEN PERMISSION OF JFP URBAN CONSULTANTS PTY LTD.

6/04/2023 K:\M2584\STAGE_4\DESIGN\WORKING DRAWINGS\ROADWORKS SECTIONS

Document Set ID: 66908359
Version: 1, Version Date: 09/05/2023
Moreton Bay Regional Council
Approved subject to conditions of Decision Notice DA/2023/0531
09/05/2023

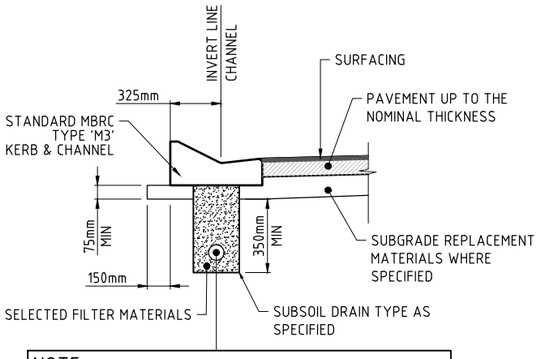

NOTE:
SIDE DRAINS ARE TO BE LOCATED UNDER ALL KERB AND CHANNEL. FOR DETAILS OF SIDE DRAIN CONSTRUCTION REFER TO IPWEAQ STD DRAWING RS-140 & RS-142

TYPICAL LOCATION NEW CONSTRUCTION - TYPE M3
SCALE 1:20

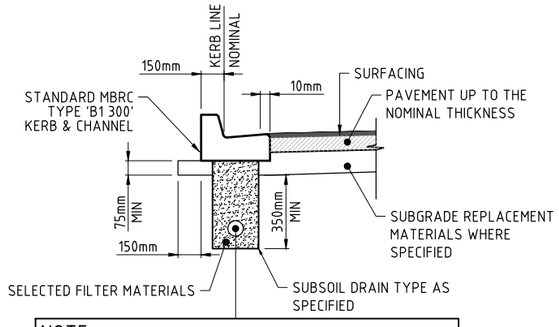

NOTE:
SIDE DRAINS ARE TO BE LOCATED UNDER ALL KERB AND CHANNEL. FOR DETAILS OF SIDE DRAIN CONSTRUCTION REFER TO IPWEAQ STD DRAWING RS-140 & RS-142

TYPICAL LOCATION NEW CONSTRUCTION - TYPE B1 300
SCALE 1:20

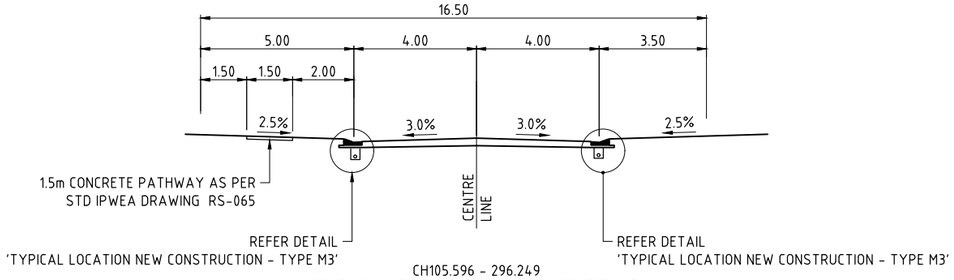

CH105.596 - 296.249
TYPICAL CROSS SECTION - TYPE M3
(TYPE M3 - RESIDENTIAL ROAD 3)
SCALE 1 : 100

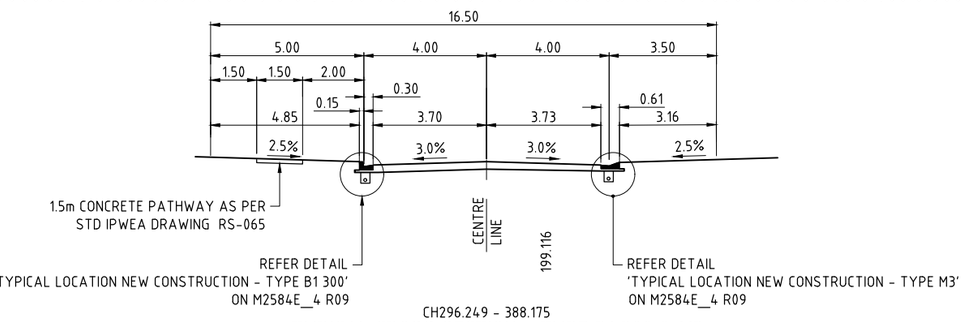

CH296.249 - 388.175
TYPICAL CROSS SECTION - TYPE B1 300 & M3
(TYPE B1 & M3 - RESIDENTIAL ROAD 3)
SCALE 1 : 100

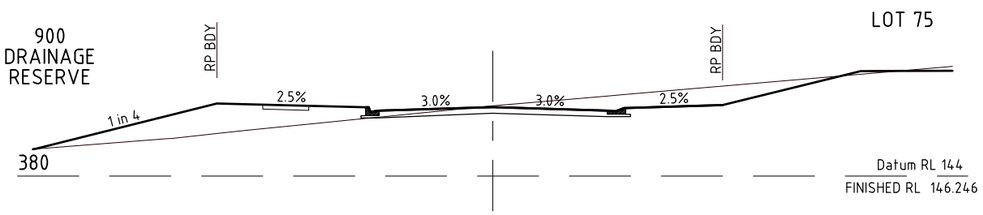

DIAL BEFORE YOU DIG www.1100.com.au The Essential First Step

NORTH:

SCALE:
Horizontal 1:1000 Vertical 1:100
A1
THIS SCALE SHOWN IS ORIGINAL DRAWING SCALE
0 1 2 3 4 5 (A1) 1:100 10 Metres
0 10 20 30 40 50 (A1) 1:1000 100
DO NOT SCALE FROM THIS DRAWING - USE ONLY DIMENSIONS PROVIDED - IF IN DOUBT PLEASE ENQUIRE

APPROVED
FOR AND ON BEHALF OF JFP URBAN CONSULTANTS PTY LTD
☐ T.M.KINNEY RPEQ 5087 ☐ A.FRASER RPEQ 5691 ☐ J.PAPPAS RPEQ 6086
☐ S.MARSH RPEQ 8068 ☑ H.WATSON RPEQ 6200

DESIGNED	CDV
DRAWN	WN
CHECKED	PNH
DATUM: AHD	

ISSUE:

ISSUE:	DETAILS:	DATE:	INIT:
B	INFORMATION REQUEST AMENDMENTS	03/04/23	CDV
A	ISSUE FOR OPERATIONAL WORKS APPROVAL	23/08/22	CDV

JFP URBAN CONSULTANTS
BRISBANE - SUNSHINE COAST - CENTRAL QLD
BRISBANE
JFP House - 76 Ernest Street,
South Brisbane Qld 4101
P 07 3012 0100 W www.jfp.com.au
JFP URBAN CONSULTANTS PTY. LTD. A.C.N. 050 414 045
PLANNERS
URBAN DESIGNERS
SURVEYORS
ENGINEERS
LANDSCAPE ARCHITECTS

TITLE:
ROADWORKS CROSS SECTIONS - ROAD 3 (FLINDERS STREET) - SHEET 2 of 2
DFC (PROJECT MANAGEMENT) PTY LTD
'ARCHERS WAY' ESTATE - STAGE 4
AT 22-80 CASH STREET, D'AGUILAR
DENNIS FAMILY CORPORATION

DETAILS:
JOB NO: M2584E_4
PLAN: R07 ISSUE: B
MORETON BAY REGIONAL COUNCIL REF: DA/38032/2019/V3VR
FILE NAME: ROADWORKS SECTIONS.DWG

COPYRIGHT © 2011 JFP URBAN CONSULTANTS PTY LTD THIS DOCUMENT MAY NOT BE COPIED OR TRANSMITTED IN ANY FORM OR BY ANY MEANS IN PART OR IN WHOLE WITHOUT THE WRITTEN PERMISSION OF JFP URBAN CONSULTANTS PTY LTD.

6/04/2023 N:\M2584E\ROAD\WORKING DRAWINGS\ROADWORKS SECTIONS

Document Set ID: 66908357
Version: 1, Version Date: 09/05/2023
Moreton Bay Regional Council
Approved subject to conditions of Decision Notice DA/2023/0531
09/05/2023

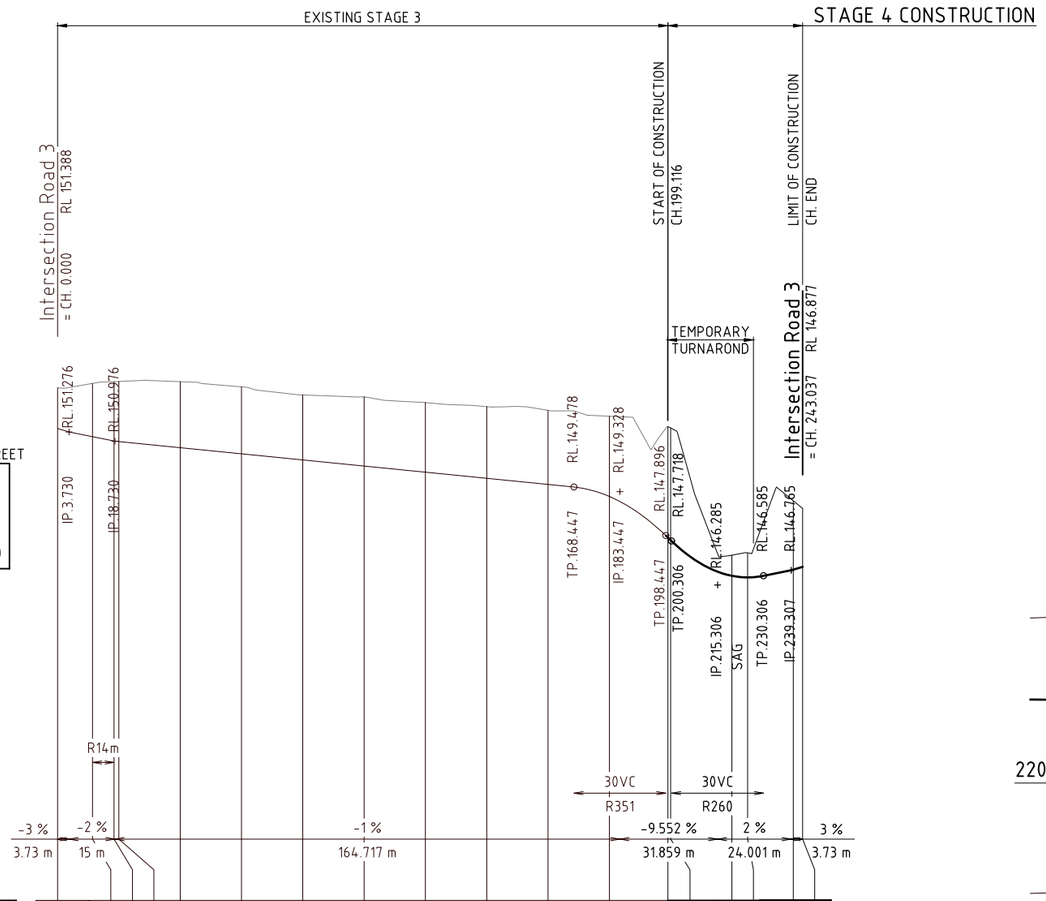

NOTES:

ASSUMED TOPSOIL DEPTH 150mm

ULTIMATE PAVEMENT DEPTHS ARE DETERMINED BY SOIL TESTS TAKEN AT FORMATION LEVEL.

ESA's 1.2×10^5
"LIVING RESIDENTIAL" - ACCESS STREET

NOMINAL PAVEMENT
CH **199.116** TO CH **END**
30mm AC (BCC TYPE 2)
125mm BASE COURSE (TYPE 2.1)
215mm SUB-BASE COURSE (TYPE 2.3)

✳ REFER INTERSECTION DETAILS FOR LIP OF KERB LEVELS ON DWG No. **M2584E_4 R03**

HORIZ. CURVE DATA

V.C.LENGTH (m)
RADIUS OF CURVATURE

TANGENT GRADE (%)
DISTANCE IP-IP

DATUM R.L.136.0

LHS LIP OF KERB LEVELS	✳		151.010	150.869	150.851	150.651	150.451	150.251	150.051	149.851	149.651	149.451	149.061		147.635	146.472	146.421	✳	
RHS LIP OF KERB LEVELS	✳		151.010	150.869	150.851	150.652	150.452	150.252	150.052	149.852	149.652	149.452	149.062		147.636	146.473	146.421	✳	
CUT (-ve) FILL	-1.325		-1.734	-1.933	-1.959	-2.151	-2.182	-2.119	-2.257	-2.272	-2.337	-2.416	-2.616		-3.658	-0.675	-0.798	-2.245	-1.905
PAVEMENT LEVELS ALONG CONTROLLINE	151.388		151.122	150.981	150.963	150.763	150.563	150.363	150.163	149.963	149.763	149.563	149.173		147.747	146.584	146.533	146.786	146.877
SURFACE LEVELS ALONG CONTROLLINE	152.712		152.857	152.915	152.922	152.914	152.745	152.482	152.420	152.235	152.100	151.979	151.789		151.405	147.258	147.332	149.031	148.783
PEGGED CHAINAGE ALONG CONTROLLINE	0.000		11.397	18.450	20.000	40.000	60.000	80.000	100.000	120.000	140.000	160.000	180.000	199.116	200.000	220.000	225.112	240.000	243.037

LONGITUDINAL SECTION - ROAD 4 (BRADMAN STREET)

("LIVING RESIDENTIAL" - ACCESS STREET CH.199.116 - END)

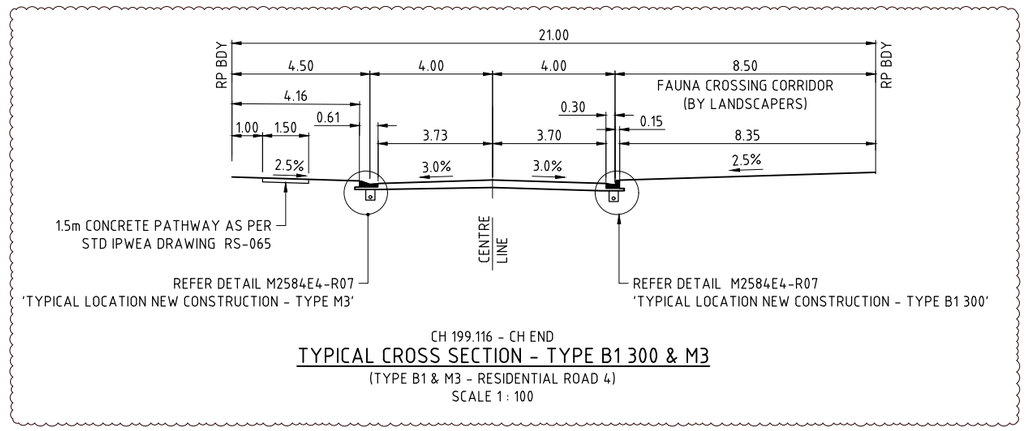

CH 199.116 - CH END

TYPICAL CROSS SECTION - TYPE B1 300 & M3

(TYPE B1 & M3 - RESIDENTIAL ROAD 4)
SCALE 1 : 100

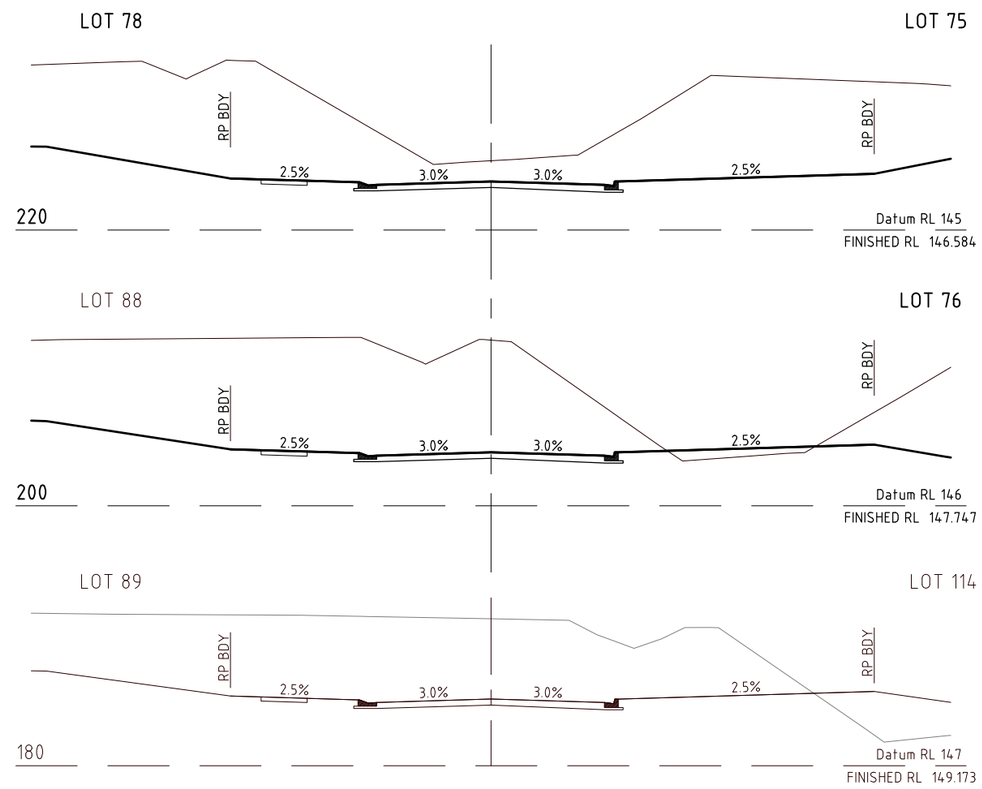

DIAL BEFORE YOU DIG
www.1100.com.au
The Essential First Step

NORTH:

SCALE:
Horizontal 1:1000
Vertical 1:100
A1
THIS SCALE SHOWN IS ORIGINAL DRAWING SCALE
(A1) 1:100 0 1 2 3 4 5 10 Metres
(A1) 1:1000 0 10 20 30 40 50 100
DO NOT SCALE FROM THIS DRAWING - USE ONLY DIMENSIONS PROVIDED - IF IN DOUBT PLEASE ENQUIRE

APPROVED
FOR AND ON BEHALF OF JFP URBAN CONSULTANTS PTY LTD
☐ T.M^cKINNEY RPEQ 5087 ☐ A.FRASER RPEQ 5691 ☐ J.PAPPAS RPEQ 6086
☐ S.MARSH RPEQ 8068 ☑ H.WATSON RPEQ 6200

DESIGNED	CDV	
DRAWN	WN	B
CHECKED	PNH	A
DATUM: AHD		ISSUE:

ISSUE:

ISSUE:	DETAILS:	DATE:	INIT:
B	INFORMATION REQUEST AMENDMENTS	03/04/23	CDV
A	ISSUE FOR OPERATIONAL WORKS APPROVAL	23/08/22	CDV

JFP URBAN CONSULTANTS
BRISBANE - SUNSHINE COAST - CENTRAL QLD
BRISBANE
JFP House - 76 Ernest Street,
South Brisbane Qld 4101
P 07 3012 0100 W www.jfp.com.au
JFP URBAN CONSULTANTS PTY. LTD. A.C.N. 050 414 045
PLANNERS
URBAN DESIGNERS
SURVEYORS
ENGINEERS
LANDSCAPE ARCHITECTS

TITLE:
ROADWORKS LONGITUDINAL & CROSS SECTIONS - ROAD 4 (BRADMAN STREET)

DFC (PROJECT MANAGEMENT) PTY LTD

'ARCHERS WAY' ESTATE - STAGE 4
AT 22-80 CASH STREET, D'AGUILAR

DENNIS FAMILY CORPORATION

DETAILS:
JOB NO: M2584E_4
PLAN: R08
ISSUE: B
MORETON BAY REGIONAL COUNCIL REF: DA/38032/2019/V3VR
FILE NAME: ROADWORKS SECTIONS.DWG

COPYRIGHT © 2011 JFP URBAN CONSULTANTS PTY LTD THIS DOCUMENT MAY NOT BE COPIED OR TRANSMITTED IN ANY FORM OR BY ANY MEANS IN PART OR IN WHOLE WITHOUT THE PERMISSION OF JFP URBAN CONSULTANTS PTY LTD.

Document Set ID: 66908359
Version: 1, Version Date: 09/05/2023
Moreton Bay Regional Council
Approved subject to conditions of Decision Notice DA/2023/0531
09/05/2023

NOTES:

ASSUMED TOPSOIL DEPTH 150mm

ULTIMATE PAVEMENT DEPTHS ARE DETERMINED BY SOIL TESTS TAKEN AT FORMATION LEVEL.

ESA's 1.2×10^5
"LIVING RESIDENTIAL" - ACCESS STREET

NOMINAL PAVEMENT
CH **0.000** TO CH **END**
30mm AC (BCC TYPE 2)
125mm BASE COURSE (TYPE 2.1)
215mm SUB-BASE COURSE (TYPE 2.3)

✳ REFER INTERSECTION DETAILS FOR LIP OF KERB LEVELS ON DWG No. **M2584E_4 R03**

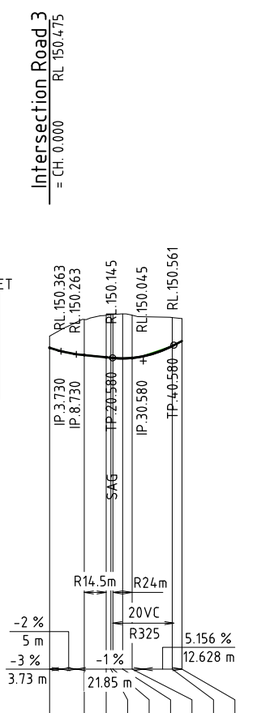

HORIZ. CURVE DATA

V.C.LENGTH (m)
RADIUS OF CURVATURE

TANGENT GRADE (%)
DISTANCE IP-IP

DATUM R.L.138.0

LHS LIP OF KERB LEVELS	✳	150.126	150.054	150.039	150.032	150.010	150.003	150.286	✳
RHS LIP OF KERB LEVELS	✳	150.126	150.054	150.039	✳				
CUT (-ve) FILL	-0.384	-1.163	-1.374	-1.406	-1.421	-1.455	-1.397	-0.932	-0.734
PAVEMENT LEVELS ALONG CONTROLLINE	150.475	150.238	150.166	150.151	150.144	150.129	150.143	150.531	150.696
SURFACE LEVELS ALONG CONTROLLINE	150.859	151.401	151.540	151.557	151.564	151.584	151.541	151.463	151.430
PEGGED CHAINAGE ALONG CONTROLLINE	0.000	11.304	18.470	20.000	20.680	23.829	26.929	40.000	43.208

LONGITUDINAL SECTION - Road 5

×(INSERT TYPE OF ROAD)×1000

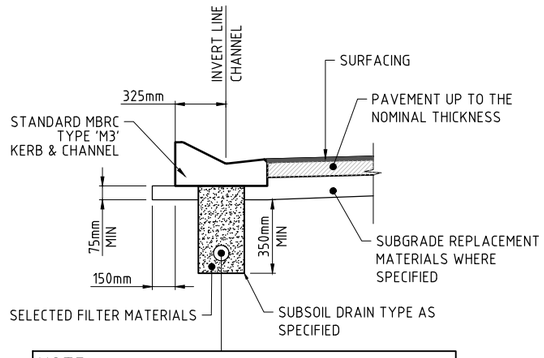

NOTE:
SIDE DRAINS ARE TO BE LOCATED UNDER ALL KERB AND CHANNEL. FOR DETAILS OF SIDE DRAIN CONSTRUCTION REFER TO IPWEAQ STD DRAWING RS-140 & RS-142

TYPICAL LOCATION NEW CONSTRUCTION - TYPE M3

SCALE 1:20

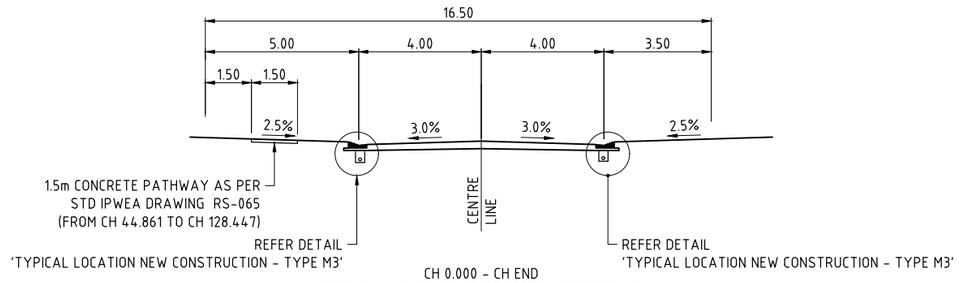

CH 0.000 - CH END

TYPICAL CROSS SECTION - TYPE M3

(TYPE M3 - RESIDENTIAL ROAD 5)
SCALE 1 : 100

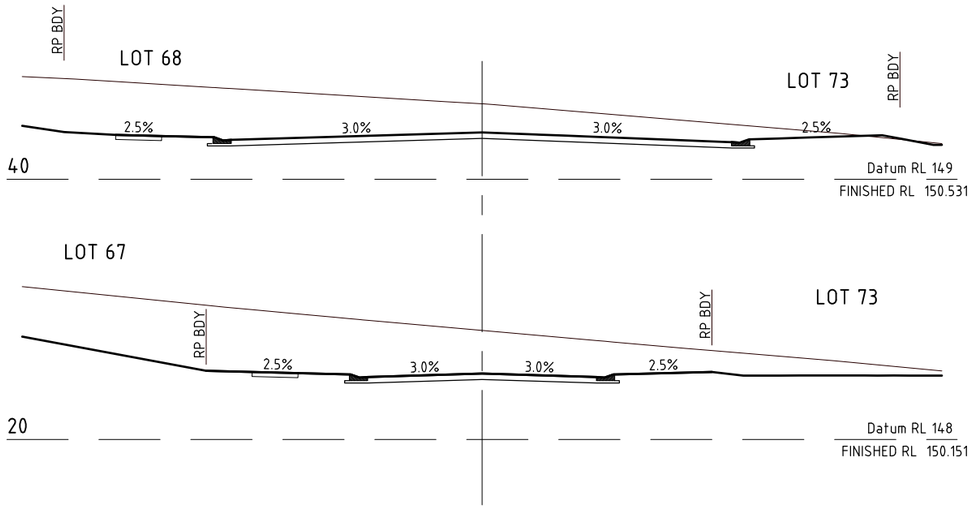

DIAL BEFORE YOU DIG www.1100.com.au The Essential First Step

NORTH:

SCALE: Horizontal 1:1000 Vertical 1:100 — A1 — THIS SCALE SHOWN IS ORIGINAL DRAWING SCALE (A1) 1:1000 (A1) 1:1000 Metres

DO NOT SCALE FROM THIS DRAWING - USE ONLY DIMENSIONS PROVIDED - IF IN DOUBT PLEASE ENQUIRE

APPROVED — FOR AND ON BEHALF OF JFP URBAN CONSULTANTS PTY LTD

T.McKINNEY RPEQ 5087 · A.FRASER RPEQ 5691 · J.PAPPAS RPEQ 6086 · S.MARSH RPEQ 8068 · H.WATSON RPEQ 6200

DESIGNED	CDV
DRAWN	WN
CHECKED	PNH
DATUM: AHD	

ISSUE:	DETAILS:	DATE:	INIT:
B	INFORMATION REQUEST AMENDMENTS	03/04/23	CDV
A	ISSUE FOR OPERATIONAL WORKS APPROVAL	23/08/22	CDV

JFP URBAN CONSULTANTS
BRISBANE - SUNSHINE COAST - CENTRAL QLD
BRISBANE
JFP House - 76 Ernest Street,
South Brisbane Qld 4101
P 07 3012 0100 W www.jfp.com.au
JFP URBAN CONSULTANTS PTY. LTD. A.C.N. 050 414 045
PLANNERS · URBAN DESIGNERS · SURVEYORS · ENGINEERS · LANDSCAPE ARCHITECTS

Moreton Bay Regional Council

TITLE: ROADWORKS LONGITUDINAL & CROSS SECTIONS - ROAD 5 (ILLAWARRA PLACE)

DFC (PROJECT MANAGEMENT) PTY LTD

'ARCHERS WAY' ESTATE - STAGE 4
AT 22-80 CASH STREET, D'AGUILAR

DENNIS FAMILY CORPORATION

DETAILS:
JOB NO: M2584E_4
PLAN: R09 ISSUE: B
MORETON BAY REGIONAL COUNCIL REF: DA/38032/2019/V3VR
FILE NAME: ROADWORKS SECTIONS.DWG

COPYRIGHT © 2011 JFP URBAN CONSULTANTS PTY LTD THIS DOCUMENT MAY NOT BE COPIED OR TRANSMITTED IN ANY FORM OR BY ANY MEANS IN PART OR IN WHOLE WITHOUT THE PERMISSION OF JFP URBAN CONSULTANTS PTY LTD.

Approved subject to conditions of Decision Notice DA/2023/0531 09/05/2023

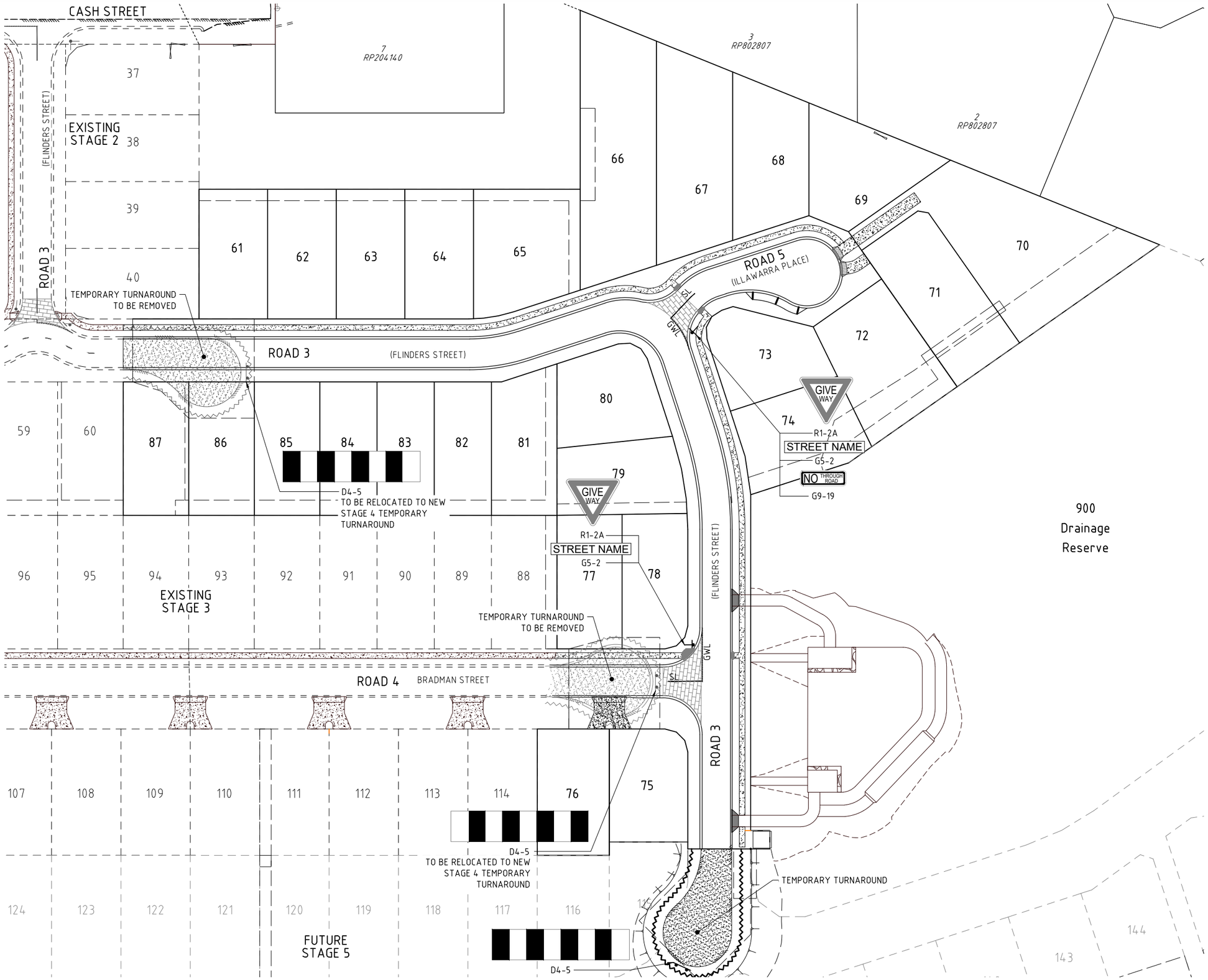

LEGEND

SL	- SEPARATION LINE
BL	- BARRIER LINE
LL	- LANE LINE
EL	- EDGE LINE
CL	- CONTINUITY LINE
TL	- TURN LINE
OL	- PAINTED ISLAND
HL	- HOLD LINE
NSL	- NO STOPPING LINES
SPL	- STOP LINE
GWL	- GIVEWAY LINE
CW	- CROSSWALK LINE

NOTES

1. ALL PAVEMENT MARKING AND TRAFFIC SIGNS TO BE INSTALLED IN ACCORDANCE WITH THE QUEENSLAND DEPARTMENT OF MAIN ROADS, MANUAL OF UNIFORM TRAFFIC CONTROLS DEVICES (MUTCD).
2. TRAFFIC ISLAND NOSES ARE TO BE PAINTED WITH WHITE REFLECTORISED PAINT.
3. RAISED REFLECTORISED PAVEMENT MARKERS (RRPM's) ARE TO BE PLACED IN ACCORDANCE WITH M.U.T.C.D. - PART 2 SECTION 4.6.5.3.

THE CONTRACTOR IS TO NOTIFY THE SUPERVISING ENGINEER OF ANY DISCREPENCIES BETWEEN THE DESIGN PLANS AND THE CONDITIONS ON SITE PRIOR TO COMMENCEMENT OF ANY WORK.

DIAL BEFORE YOU DIG www.1100.com.au The Essential First Step

URBAN CONSULTANTS
JFOP
BRISBANE - SUNSHINE COAST - CENTRAL QLD
BRISBANE
JFP House - 76 Ernest Street,
South Brisbane Qld 4101
P 07 3012 0100 W www.jfp.com.au
JFP URBAN CONSULTANTS PTY. LTD. A.C.N. 050 414 045
PLANNERS
URBAN DESIGNERS
SURVEYORS
ENGINEERS
LANDSCAPE ARCHITECTS

NORTH: N

SCALE: 1:500 A1

THIS SCALE SHOWN IS ORIGINAL DRAWING SCALE
0 5 10 15 20 25 (A1) 1:500 50 Metres
(A3) 1:1000

DO NOT SCALE FROM THIS DRAWING - USE ONLY DIMENSIONS PROVIDED - IF IN DOUBT PLEASE ENQUIRE

APPROVED
FOR AND ON BEHALF OF JFP URBAN CONSULTANTS PTY LTD
T.McKINNEY RPEQ 5087
A.FRASER RPEQ 5691
J.PAPPAS RPEQ 6086
S.MARSH RPEQ 8068
H.WATSON RPEQ 6200

DESIGNED	CDV
DRAWN	WN
CHECKED	PNH
DATUM: AHD	

ISSUE:	DETAILS:	DATE:	INIT:
A	ISSUE FOR OPERATIONAL WORKS APPROVAL	23/08/22	CDV

TITLE:

SIGNS AND LINEMARKING PLAN

DFC (PROJECT MANAGEMENT) PTY LTD

'ARCHERS WAY' ESTATE - STAGE 4
AT 22-80 CASH STREET, D'AGUILAR

DENNIS FAMILY CORPORATION

DETAILS:
JOB NO: M2584E_4
PLAN: SL01 ISSUE: A
MORETON BAY REGIONAL COUNCIL REF: DA/38032/2019/V3VR
FILE NAME: LINEMARKING.DWG

COPYRIGHT © 2011 JFP URBAN CONSULTANTS PTY LTD THIS DOCUMENT MAY NOT BE COPIED OR TRANSMITTED IN ANY FORM OR BY ANY MEANS IN PART OR IN WHOLE WITHOUT THE PERMISSION OF JFP URBAN CONSULTANTS PTY LTD.

Document Set ID: 66908359
Version: 1, Version Date: 09/05/2023
Moreton Bay Regional Council
Approved subject to conditions of Decision Notice DA/2023/0531
09/05/2023

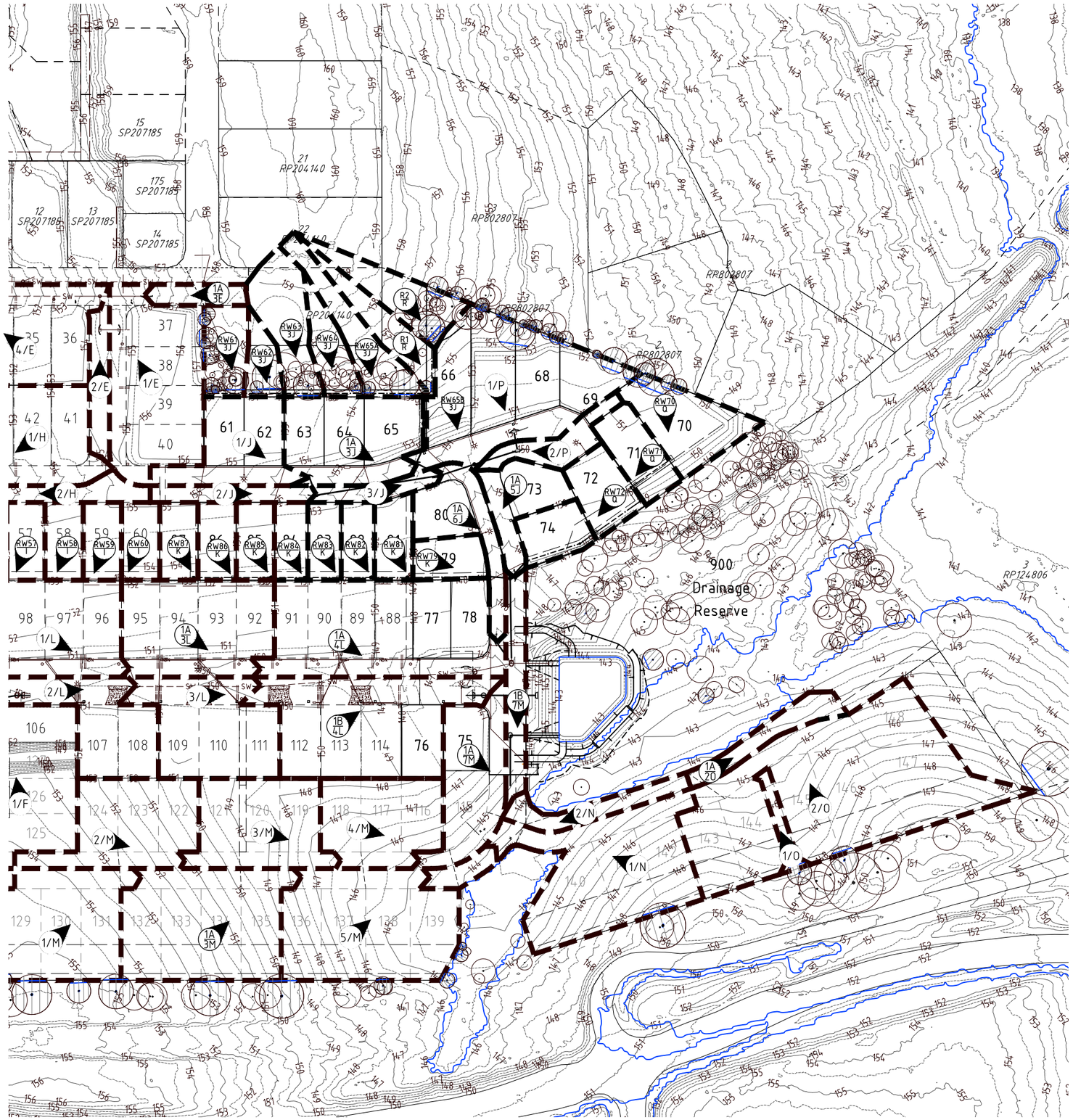

CATCHMENT NAME	CATCHMENT AREA (ha)	RUNOFF COEFF MINOR	RUNOFF COEFF MAJOR
1/A	0.069	0.88	1.00
3/A	0.046	0.88	1.00
4/A	0.031	0.88	1.00
RW1/B	0.066	0.91	1.00
RW2/B	0.067	0.91	1.00
RW3/B	0.067	0.91	1.00
RW13/D	0.063	0.91	1.00
RW12/D	0.060	0.91	1.00
RW11/D	0.060	0.91	1.00
RW10/D	0.060	0.91	1.00
RW9/D	0.060	0.91	1.00
RW8/D	0.074	0.91	1.00
RW4/B	0.070	0.91	1.00
1A/6A	0.087	0.88	1.00
6/A	0.030	0.88	1.00
7/A	0.172	0.88	1.00
RW5/C	0.102	0.91	1.00
1/O	0.026	0.88	1.00
1A/2O	0.070	0.88	1.00
2/O	0.713	0.88	1.00
RW87/K	0.060	0.91	1.00
RW86/K	0.060	0.91	1.00
RW85/K	0.060	0.91	1.00
RW84/K	0.053	0.91	1.00
RW83/K	0.053	0.91	1.00
RW82/K	0.053	0.91	1.00
RW81/K	0.064	0.91	1.00
RW79/K	0.061	0.91	1.00
RW70/Q	0.125	0.91	1.00
RW71/Q	0.095	0.91	1.00
RW72/Q	0.083	0.91	1.00
RW74/Q	0.069	0.91	1.00
1/J	0.193	0.88	1.00
2/J	0.055	0.88	1.00
1/L	0.307	0.88	1.00
2/L	0.210	0.88	1.00
1/P	0.459	0.88	1.00
2/P	0.074	0.88	1.00
1A/3J	0.244	0.88	1.00
3/J	0.044	0.88	1.00
5/J	0.120	0.88	1.00
1A/3L	0.291	0.88	1.00
3/L	0.250	0.88	1.00
1A/4L	0.442	0.88	1.00
1B/4L	0.379	0.88	1.00
1A/6J	0.131	0.88	1.00
1/M	0.272	0.88	1.00
2/M	0.237	0.88	1.00
1A/3M	0.361	0.88	1.00
3/M	0.232	0.88	1.00
4/M	0.208	0.88	1.00

EXISTING STAGE 1 CATCHMENTS
FUTURE STAGE 5 CATCHMENTS
STAGE 4 CATCHMENTS
EXISTING STAGE 3 CATCHMENTS
STAGE 4 CATCHMENTS
EXISTING STAGE 3 CATCHMENTS
STAGE 4 CATCHMENTS
FUTURE STAGE 5 CATCHMENTS

LEGEND:

FINISHED CONTOURS

PROPOSED STORMWATER DRAINAGE

PROPOSED CATCHMENT BOUNDARIES

CATCHMENT NUMBERS (1 / A)

CATCHMENT NAME	CATCHMENT AREA (ha)	RUNOFF COEFF MINOR	RUNOFF COEFF MAJOR
5/M	0.374	0.88	1.00
5A/M	0.032	0.88	1.00
1/N	0.376	0.88	1.00
2/N	0.070	0.88	1.00
1A/7M	0.199	0.88	1.00
1B/7M	0.091	0.88	1.00
RW60/I	0.060	0.91	1.00
RW59/I	0.060	0.91	1.00
RW58/I	0.060	0.91	1.00
RW57/I	0.060	0.91	1.00
RW56/I	0.064	0.91	1.00
1/F	0.315	0.88	1.00
2/F	0.171	0.88	1.00
4/F	0.247	0.88	1.00
1A/5F	0.127	0.88	1.00
5/F	0.217	0.88	1.00
7/F	0.333	0.88	1.00
8/F	0.386	0.88	1.00
1/E	0.334	0.88	1.00
2/E	0.062	0.88	1.00
1/H	0.239	0.88	1.00
2/H	0.069	0.88	1.00
1A/3E	0.041	0.88	1.00
4/E	0.308	0.88	1.00
5/E	0.399	0.88	1.00
1A/3H	0.230	0.88	1.00
3/H	0.236	0.88	1.00
1A/4H	0.253	0.88	1.00
4/H	0.211	0.88	1.00
1A/10F	0.372	0.88	1.00
10/F	0.082	0.88	1.00
1/G	0.171	0.88	1.00

FUTURE STAGE 5 CATCHMENTS
EXISTING STAGE 2 CATCHMENTS
EXISTING STAGE 3 CATCHMENTS
FUTURE STAGE 5 CATCHMENTS
EXISTING STAGE 1 CATCHMENTS
EXISTING STAGE 2 CATCHMENTS
EXISTING STAGE 1 CATCHMENTS

DIAL BEFORE YOU DIG www.1100.com.au The Essential First Step

JFP URBAN CONSULTANTS
BRISBANE - SUNSHINE COAST - CENTRAL QLD
BRISBANE
JFP House - 76 Ernest Street,
South Brisbane Qld 4101
P 07 3012 0100 W www.jfp.com.au
JFP URBAN CONSULTANTS PTY. LTD. A.C.N. 050 414 045
PLANNERS
URBAN DESIGNERS
SURVEYORS
ENGINEERS
LANDSCAPE ARCHITECTS

NORTH: N

SCALE: 1:1000 A1
THIS SCALE SHOWN IS ORIGINAL DRAWING SCALE
0 10 20 30 40 50 (A1) 1:1000 100 Metres
(A3) 1:2000
DO NOT SCALE FROM THIS DRAWING - USE ONLY DIMENSIONS PROVIDED - IF IN DOUBT PLEASE ENQUIRE

APPROVED
FOR AND ON BEHALF OF JFP URBAN CONSULTANTS PTY LTD
T.McKINNEY RPEQ 5087 | A.FRASER RPEQ 5691 | J.PAPPAS RPEQ 6086 | S.MARSH RPEQ 8068 | H.WATSON RPEQ 6200

DESIGNED	CDV
DRAWN	WN
CHECKED	PNH
DATUM: AHD	

ISSUE:	DETAILS:	DATE:	INIT:
B	ELECTRICAL TRANSFORMER & BIORETENTION BASIN ADDED	##/02/23	FR
A	ISSUE FOR OPERATIONAL WORKS APPROVAL	23/08/22	CDV

TITLE:
DRAINAGE CATCHMENT PLAN

DFC (PROJECT MANAGEMENT) PTY LTD

'ARCHERS WAY' ESTATE - STAGE 4
AT 22-80 CASH STREET, D'AGUILAR

DENNIS FAMILY CORPORATION

DETAILS:
JOB NO: M2584E_4
PLAN: D01 ISSUE: B
MORETON BAY REGIONAL COUNCIL REF: DA/38032/2019/V3VR
FILE NAME: DRAINAGE.DWG

COPYRIGHT © 2011 JFP URBAN CONSULTANTS PTY LTD THIS DOCUMENT MAY NOT BE COPIED OR TRANSMITTED IN ANY FORM OR BY ANY MEANS IN PART OR IN WHOLE WITHOUT THE WRITTEN PERMISSION OF JFP URBAN CONSULTANTS PTY LTD.

Document Set ID: 66908357
Version: 1, Version Date: 09/05/2023
Moreton Bay Regional Council
Approved subject to conditions of Decision Notice DA/2023/0531
09/05/2023

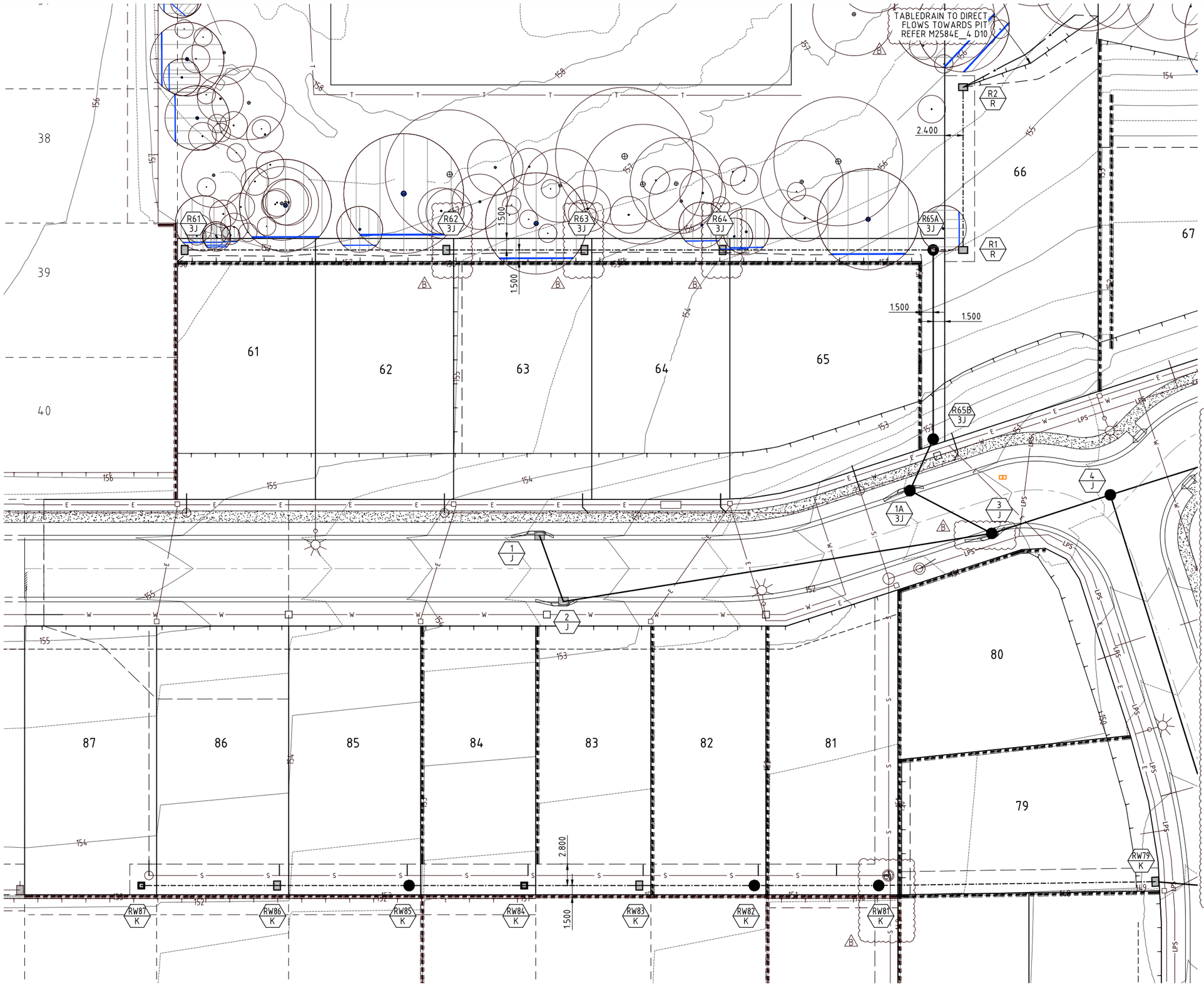

LEGEND:

- EXISTING STORMWATER DRAINAGE
- FINISHED CONTOURS
- PROPOSED STORMWATER DRAINAGE
- PROPOSED ROOFWATER DRAINAGE
- SEWERAGE
- WATER MAIN
- ROOFWATER DRAINAGE KERB ADAPTORS (FULL DEPTH TYPE)
- STRUCTURE NUMBERS

EXISTING / PROPOSED / FUTURE

TREE LEGEND

TREES TO BE RETAINED AND PROTECTED

TREES TO BE RETAINED AND REQUIRES THE SUPERVISION OF ANY EXCAVATION OR SERVICES WORKS WITHIN THE HATCHED PROTECTION ZONE BY AN ARBORIST ON SITE.

TPZ
Tree Protection Zone
All vegetation to be protected in accordance with AS4970 - Protection of Trees on Development Sites & any conditions of approval.

DRAINAGE NOTES:

1. ROOFWATER LINES TO BE LAID 0.6m FROM PROPERTY BOUNDARIES, WHERE ROOFWATER LINE IS PARALLEL WITH SEWER 1.0m CLEARANCE TO SEWER LINE IS TO BE PROVIDED.
2. ROOFWATER PITS TO BE IN ACCORDANCE WITH IPWEAQ STD DWG D-0110 WITH CONCRETE INFILL GATIC LIDS OR APPROVED EQUIVALENT.
3. GRATED ROOFWATER PITS TO BE IN ACCORDANCE WITH IPWEAQ STD DWG D-0050 WITH 'BOLT DOWN' HEAVY DUTY GRATES & HOT DIPPED GALVANISED TO AS 1650.
4. THE DESIGN SURFACE LEVELS SHOWN FOR ROOFWATER PITS IS INDICATIVE ONLY.
   - PITS WITH SOLID COVERS SHALL FINISH 25mm (APPROX) ABOVE THE FINISHED SURFACE LEVEL
   - PITS WITH GRATED TOPS SHALL FINISH:
     a)AT THE INVERT OF CUT-OFF DRAINS (IF APPLICABLE)
     b)200mm BELOW THE SURROUNDING FINSHED SURFACE
4. THE FINISHED SURFACE SHALL BE SHAPED TO DIRECT OVERLAND FLOW TO THE GRATED PITS
5. ALL GULLIES ARE TO BE LIP IN LINE TYPE S LINTEL IN ACCORDANCE WITH IPWEA STD DWGS DS-061, DS-062 & DS-063.
6. LOTS WITH FIELD INLETS ARE TO BE GRADED TO DIVERT WATER TO PITS.
7. ALL GRATES IN PRIVATE PROPERTY ARE TO BOLTED DOWN.
8. ACCESS CHAMBERS (MANHOLES) TO BE CONSTRUCTED IN ACCORDANCE WITH IPWEA STD DWGS DS-010. DS-015, DS-018, DS-019, DS-020 & DS-021.
9. STORMWATER BEDDING AND BACKFILL TO BE IN ACCORDANCE WITH IPWEA STD DWGS DS-030 AND DS-031. THE MINIMUM FREQUENCY OF TESTING SHALL BE IN ACCORDANCE WITH COUNCIL'S PLANNING SCHEME POLICY OPERATIONAL WORKS INSPECTIONS MAINTENANCE AND BONDING PROCEDURES-INTEGRATED DESIGN.
10. PIPES TO BE CONCRETE REINFORCED (CLASS 2) UNLESS NOTED OTHERWISE. (U) DENOTES uPVC CLASS SN8.
11. THE CONTRACTOR SHALL BE RESPONSIBLE FOR PIPES DURING CONSTRUCTION AND SHALL ADOPT CONSTRUCTION PRACTICES TO PREVENT CRACKING. ALL PIPES TO BE CCTV INSPECTED AT THE AND OF WORKS.
12. PIPES UP TO AND INCLUDING 600mm DIAMETER SHALL BE RUBBER RING JOINTED.
13. PIPES GREATER THAN 600mm WHERE NOT LOCATED IN SANDY SOILS, SHALL BE INTERNAL FLUSH JOINTED WITH PIPE MANUFACTURERS PROPRIETARY EXTERNAL BANDS.

DIAL BEFORE YOU DIG
www.1100.com.au
The Essential First Step

JFP URBAN CONSULTANTS
BRISBANE - SUNSHINE COAST - CENTRAL QLD
BRISBANE
JFP House - 76 Ernest Street,
South Brisbane Qld 4101
P 07 3012 0100 W www.jfp.com.au
JFP URBAN CONSULTANTS PTY. LTD. A.C.N. 050 414 045
PLANNERS
URBAN DESIGNERS
SURVEYORS
ENGINEERS
LANDSCAPE ARCHITECTS

NORTH: N

SCALE: 1:250 A1
THIS SCALE SHOWN IS ORIGINAL DRAWING SCALE
0 2.5 5 7.5 10 12.5 (A1) 1:250 25 Metres
(A3) 1:500
DO NOT SCALE FROM THIS DRAWING - USE ONLY DIMENSIONS PROVIDED - IF IN DOUBT PLEASE ENQUIRE

APPROVED
FOR AND ON BEHALF OF JFP URBAN CONSULTANTS PTY LTD
T.McKINNEY RPEQ 5087
A.FRASER RPEQ 5691
J.PAPPAS RPEQ 6086
S.MARSH RPEQ 8068
H.WATSON RPEQ 6200

DESIGNED	CDV
DRAWN	WN
CHECKED	PNH
DATUM: AHD	

ISSUE:	DETAILS:	DATE:	INIT:
B	INFORMATION REQUEST AMENDMENTS	03/04/23	CDV
A	ISSUE FOR OPERATIONAL WORKS APPROVAL	23/08/22	CDV

TITLE:
DRAINAGE DETAILS LAYOUT PLAN - SHEET 1 OF 3
DFC (PROJECT MANAGEMENT) PTY LTD
'ARCHERS WAY' ESTATE - STAGE 4
AT 22-80 CASH STREET, D'AGUILAR

DENNIS FAMILY CORPORATION

DETAILS:
JOB NO: M2584E_4
PLAN: D02 ISSUE: B
MORETON BAY REGIONAL COUNCIL REF: DA/38032/2019/V3VR
FILE NAME: DRAINAGE.DWG

COPYRIGHT © 2011 JFP URBAN CONSULTANTS PTY LTD THIS DOCUMENT MAY NOT BE COPIED OR TRANSMITTED IN ANY FORM OR BY ANY MEANS IN PART OR IN WHOLE WITHOUT THE WRITTEN PERMISSION OF JFP URBAN CONSULTANTS PTY LTD.

Document Set ID: 66908359
Version: 1, Version Date: 09/05/2023
Moreton Bay Regional Council
Approved subject to conditions of Decision Notice DA/2023/0531
09/05/2023

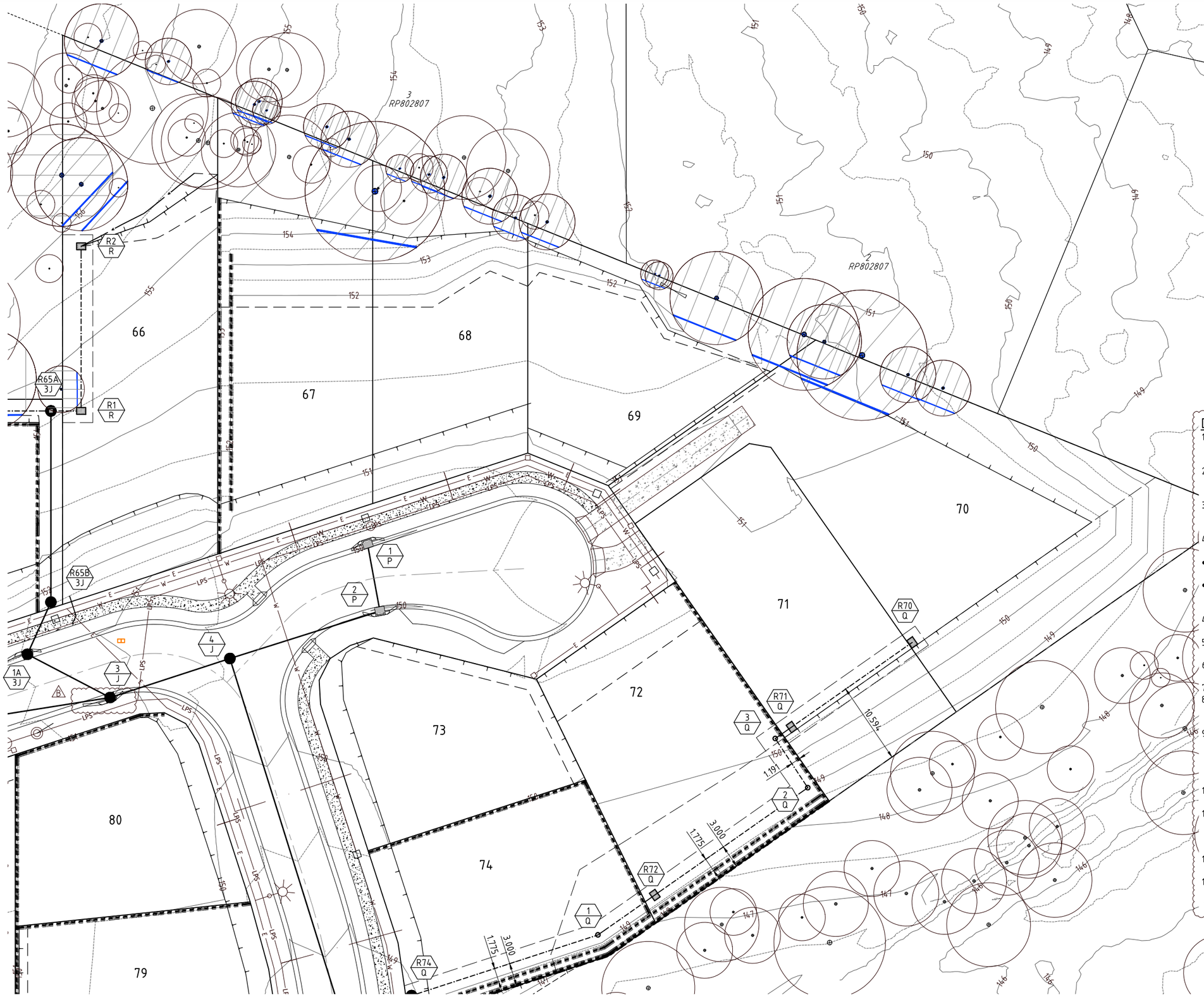

LEGEND:

- EXISTING STORMWATER DRAINAGE
- FINISHED CONTOURS
- PROPOSED STORMWATER DRAINAGE
- PROPOSED ROOFWATER DRAINAGE
- SEWERAGE
- WATER MAIN
- ROOFWATER DRAINAGE KERB ADAPTORS (FULL DEPTH TYPE)
- STRUCTURE NUMBERS

EXISTING / PROPOSED / FUTURE

TREE LEGEND

TREES TO BE RETAINED AND PROTECTED

TREES TO BE RETAINED AND REQUIRES THE SUPERVISION OF ANY EXCAVATION OR SERVICES WORKS WITHIN THE HATCHED PROTECTION ZONE BY AN ARBORIST ON SITE.

TPZ
Tree Protection Zone
All vegetation to be protected in accordance with AS4970 - Protection of Trees on Development Sites & any conditions of approval.

DRAINAGE NOTES:

1. ROOFWATER LINES TO BE LAID 0.6m FROM PROPERTY BOUNDARIES, WHERE ROOFWATER LINE IS PARALLEL WITH SEWER 1.0m CLEARANCE TO SEWER LINE IS TO BE PROVIDED.
2. ROOFWATER PITS TO BE IN ACCORDANCE WITH IPWEAQ STD DWG D-0110 WITH CONCRETE INFILL GATIC LIDS OR APPROVED EQUIVALENT.
3. GRATED ROOFWATER PITS TO BE IN ACCORDANCE WITH IPWEAQ STD DWG D-0050 WITH 'BOLT DOWN' HEAVY DUTY GRATES & HOT DIPPED GALVANISED TO AS 1650.
4. THE DESIGN SURFACE LEVELS SHOWN FOR ROOFWATER PITS IS INDICATIVE ONLY.
   - PITS WITH SOLID COVERS SHALL FINISH 25mm (APPROX) ABOVE THE FINISHED SURFACE LEVEL
   - PITS WITH GRATED TOPS SHALL FINISH:
     a)AT THE INVERT OF CUT-OFF DRAINS (IF APPLICABLE)
     b)200mm BELOW THE SURROUNDING FINSHED SURFACE
4. THE FINISHED SURFACE SHALL BE SHAPED TO DIRECT OVERLAND FLOW TO THE GRATED PITS
5. ALL GULLIES ARE TO BE LIP IN LINE TYPE S LINTEL IN ACCORDANCE WITH IPWEA STD DWGS DS-061, DS-062 & DS-063.
6. LOTS WITH FIELD INLETS ARE TO BE GRADED TO DIVERT WATER TO PITS.
7. ALL GRATES IN PRIVATE PROPERTY ARE TO BOLTED DOWN.
8. ACCESS CHAMBERS (MANHOLES) TO BE CONSTRUCTED IN ACCORDANCE WITH IPWEA STD DWGS DS-010. DS-015, DS-018, DS-019, DS-020 & DS-021.
9. STORMWATER BEDDING AND BACKFILL TO BE IN ACCORDANCE WITH IPWEA STD DWGS DS-030 AND DS-031. THE MINIMUM FREQUENCY OF TESTING SHALL BE IN ACCORDANCE WITH COUNCIL'S PLANNING SCHEME POLICY OPERATIONAL WORKS INSPECTIONS MAINTENANCE AND BONDING PROCEDURES-INTEGRATED DESIGN.
10. PIPES TO BE CONCRETE REINFORCED (CLASS 2) UNLESS NOTED OTHERWISE. (U) DENOTES uPVC CLASS SN8.
11. THE CONTRACTOR SHALL BE RESPONSIBLE FOR PIPES DURING CONSTRUCTION AND SHALL ADOPT CONSTRUCTION PRACTICES TO PREVENT CRACKING. ALL PIPES TO BE CCTV INSPECTED AT THE AND OF WORKS.
12. PIPES UP TO AND INCLUDING 600mm DIAMETER SHALL BE RUBBER RING JOINTED.
13. PIPES GREATER THAN 600mm WHERE NOT LOCATED IN SANDY SOILS, SHALL BE INTERNAL FLUSH JOINTED WITH PIPE MANUFACTURERS PROPRIETARY EXTERNAL BANDS.

DIAL BEFORE YOU DIG
www.1100.com.au
The Essential First Step

URBAN CONSULTANTS
JFP
BRISBANE - SUNSHINE COAST - CENTRAL QLD
BRISBANE
JFP House - 76 Ernest Street,
South Brisbane Qld 4101
P 07 3012 0100 W www.jfp.com.au
JFP URBAN CONSULTANTS PTY. LTD. A.C.N. 050 414 045
PLANNERS
URBAN DESIGNERS
SURVEYORS
ENGINEERS
LANDSCAPE ARCHITECTS

NORTH: N

SCALE: 1:500 A1
THIS SCALE SHOWN IS ORIGINAL DRAWING SCALE
0 5 10 15 20 25 (A1) 1:500 50 Metres
(A3) 1:1000
DO NOT SCALE FROM THIS DRAWING - USE ONLY DIMENSIONS PROVIDED - IF IN DOUBT PLEASE ENQUIRE

APPROVED
FOR AND ON BEHALF OF JFP URBAN CONSULTANTS PTY LTD
T.McKINNEY RPEQ 5087
A.FRASER RPEQ 5691
J.PAPPAS RPEQ 6086
S.MARSH RPEQ 8068
H.WATSON RPEQ 6200

DESIGNED	CDV
DRAWN	WN
CHECKED	PNH
DATUM: AHD	

ISSUE:	DETAILS:	DATE:	INIT:
B	INFORMATION REQUEST AMENDMENTS	03/04/23	CDV
A	ISSUE FOR OPERATIONAL WORKS APPROVAL	23/08/22	CDV

TITLE:
DRAINAGE DETAILS LAYOUT PLAN - SHEET 2 OF 3
DFC (PROJECT MANAGEMENT) PTY LTD
'ARCHERS WAY' ESTATE - STAGE 4
AT 22-80 CASH STREET, D'AGUILAR

DENNIS FAMILY CORPORATION

DETAILS:
JOB NO: M2584E_4
PLAN: D03 ISSUE: B
MORETON BAY REGIONAL COUNCIL REF: DA/38032/2019/V3VR
FILE NAME: DRAINAGE.DWG

COPYRIGHT © 2011 JFP URBAN CONSULTANTS PTY LTD THIS DOCUMENT MAY NOT BE COPIED OR TRANSMITTED IN ANY FORM OR BY ANY MEANS IN PART OR IN WHOLE WITHOUT THE PERMISSION OF JFP URBAN CONSULTANTS PTY LTD.

Document Set ID: 66908359
Version: 1, Version Date: 09/05/2023
Moreton Bay Regional Council
Approved subject to conditions of Decision Notice DA/2023/0531
09/05/2023

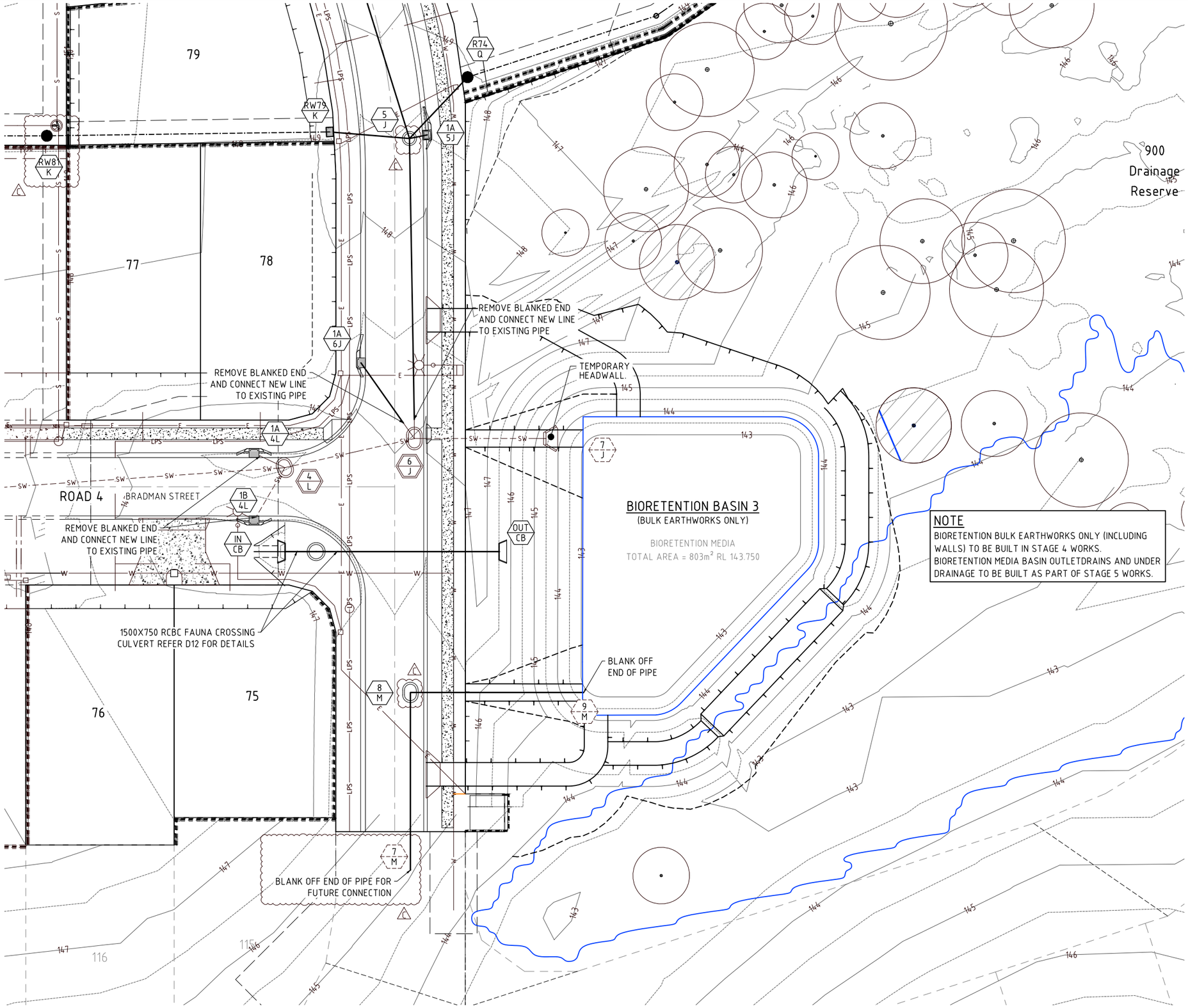

LEGEND:

- EXISTING STORMWATER DRAINAGE
- FINISHED CONTOURS
- PROPOSED STORMWATER DRAINAGE
- PROPOSED ROOFWATER DRAINAGE
- SEWERAGE
- WATER MAIN
- ROOFWATER DRAINAGE KERB ADAPTORS (FULL DEPTH TYPE)
- STRUCTURE NUMBERS

EXISTING / PROPOSED / FUTURE

TREE LEGEND

TREES TO BE RETAINED AND PROTECTED

TREES TO BE RETAINED AND REQUIRES THE SUPERVISION OF ANY EXCAVATION OR SERVICES WORKS WITHIN THE HATCHED PROTECTION ZONE BY AN ARBORIST ON SITE.

TPZ
Tree Protection Zone
All vegetation to be protected in accordance with AS4970 - Protection of Trees on Development Sites & any conditions of approval.

DRAINAGE NOTES:

1. ROOFWATER LINES TO BE LAID 0.6m FROM PROPERTY BOUNDARIES, WHERE ROOFWATER LINE IS PARALLEL WITH SEWER 1.0m CLEARANCE TO SEWER LINE IS TO BE PROVIDED.
2. ROOFWATER PITS TO BE IN ACCORDANCE WITH IPWEAQ STD DWG D-0110 WITH CONCRETE INFILL GATIC LIDS OR APPROVED EQUIVALENT.
3. GRATED ROOFWATER PITS TO BE IN ACCORDANCE WITH IPWEAQ STD DWG D-0050 WITH 'BOLT DOWN' HEAVY DUTY GRATES & HOT DIPPED GALVANISED TO AS 1650.
4. THE DESIGN SURFACE LEVELS SHOWN FOR ROOFWATER PITS IS INDICATIVE ONLY.
   - PITS WITH SOLID COVERS SHALL FINISH 25mm (APPROX) ABOVE THE FINISHED SURFACE LEVEL
   - PITS WITH GRATED TOPS SHALL FINISH:
     a)AT THE INVERT OF CUT-OFF DRAINS (IF APPLICABLE)
     b)200mm BELOW THE SURROUNDING FINSHED SURFACE
4. THE FINISHED SURFACE SHALL BE SHAPED TO DIRECT OVERLAND FLOW TO THE GRATED PITS
5. ALL GULLIES ARE TO BE LIP IN LINE TYPE S LINTEL IN ACCORDANCE WITH IPWEA STD DWGS DS-061, DS-062 & DS-063.
6. LOTS WITH FIELD INLETS ARE TO BE GRADED TO DIVERT WATER TO PITS.
7. ALL GRATES IN PRIVATE PROPERTY ARE TO BOLTED DOWN.
8. ACCESS CHAMBERS (MANHOLES) TO BE CONSTRUCTED IN ACCORDANCE WITH IPWEA STD DWGS DS-010. DS-015, DS-018, DS-019, DS-020 & DS-021.
9. STORMWATER BEDDING AND BACKFILL TO BE IN ACCORDANCE WITH IPWEA STD DWGS DS-030 AND DS-031. THE MINIMUM FREQUENCY OF TESTING SHALL BE IN ACCORDANCE WITH COUNCIL'S PLANNING SCHEME POLICY OPERATIONAL WORKS INSPECTIONS MAINTENANCE AND BONDING PROCEDURES-INTEGRATED DESIGN.
10. PIPES TO BE CONCRETE REINFORCED (CLASS 2) UNLESS NOTED OTHERWISE. (U) DENOTES uPVC CLASS SN8.
11. THE CONTRACTOR SHALL BE RESPONSIBLE FOR PIPES DURING CONSTRUCTION AND SHALL ADOPT CONSTRUCTION PRACTICES TO PREVENT CRACKING. ALL PIPES TO BE CCTV INSPECTED AT THE AND OF WORKS.
12. PIPES UP TO AND INCLUDING 600mm DIAMETER SHALL BE RUBBER RING JOINTED.
13. PIPES GREATER THAN 600mm WHERE NOT LOCATED IN SANDY SOILS, SHALL BE INTERNAL FLUSH JOINTED WITH PIPE MANUFACTURERS PROPRIETARY EXTERNAL BANDS.

DIAL BEFORE YOU DIG
www.1100.com.au
The Essential First Step

JFP URBAN CONSULTANTS
BRISBANE - SUNSHINE COAST - CENTRAL QLD
BRISBANE
JFP House - 76 Ernest Street,
South Brisbane Qld 4101
P 07 3012 0100 W www.jfp.com.au
JFP URBAN CONSULTANTS PTY. LTD. A.C.N. 050 414 045
PLANNERS
URBAN DESIGNERS
SURVEYORS
ENGINEERS
LANDSCAPE ARCHITECTS

NORTH: N

SCALE: 1:500 A1
THIS SCALE SHOWN IS ORIGINAL DRAWING SCALE
0 5 10 15 20 25 (A1) 1:500 50 Metres
(A3) 1:1000
DO NOT SCALE FROM THIS DRAWING - USE ONLY DIMENSIONS PROVIDED - IF IN DOUBT PLEASE ENQUIRE

APPROVED
FOR AND ON BEHALF OF JFP URBAN CONSULTANTS PTY LTD
T.M.KINNEY RPEQ 5087
A.FRASER RPEQ 5691
J.PAPPAS RPEQ 6086
S.MARSH RPEQ 8068
H.WATSON RPEQ 6200

DESIGNED	CDV
DRAWN	WN
CHECKED	PNH
DATUM: AHD	

ISSUE:	DETAILS:	DATE:	INIT:
C	INFORMATION REQUEST AMENDMENTS	03/04/23	CDV
B	ELECT TRANSFORMER & BIORETENTION BASIN ADDED	10/02/23	FR
A	ISSUE FOR OPERATIONAL WORKS APPROVAL	23/08/22	CDV

TITLE:
DRAINAGE DETAILS LAYOUT PLAN - SHEET 3 OF 3
DFC (PROJECT MANAGEMENT) PTY LTD
'ARCHERS WAY' ESTATE - STAGE 4
AT 22-80 CASH STREET, D'AGUILAR

DENNIS FAMILY CORPORATION

DETAILS:
JOB NO: M2584E_4
PLAN: D04 ISSUE: C
MORETON BAY REGIONAL COUNCIL REF: DA/38032/2019/V3VR
FILE NAME: DRAINAGE.DWG

COPYRIGHT © 2011 JFP URBAN CONSULTANTS PTY LTD THIS DOCUMENT MAY NOT BE COPIED OR TRANSMITTED IN ANY FORM OR BY ANY MEANS IN PART OR IN WHOLE WITHOUT THE PERMISSION OF JFP URBAN CONSULTANTS PTY LTD.

Document Set ID: 66908359
Version: 1, Version Date: 09/05/2023
Moreton Bay Regional Council
Approved subject to conditions of Decision Notice DA/2023/0531
09/05/2023

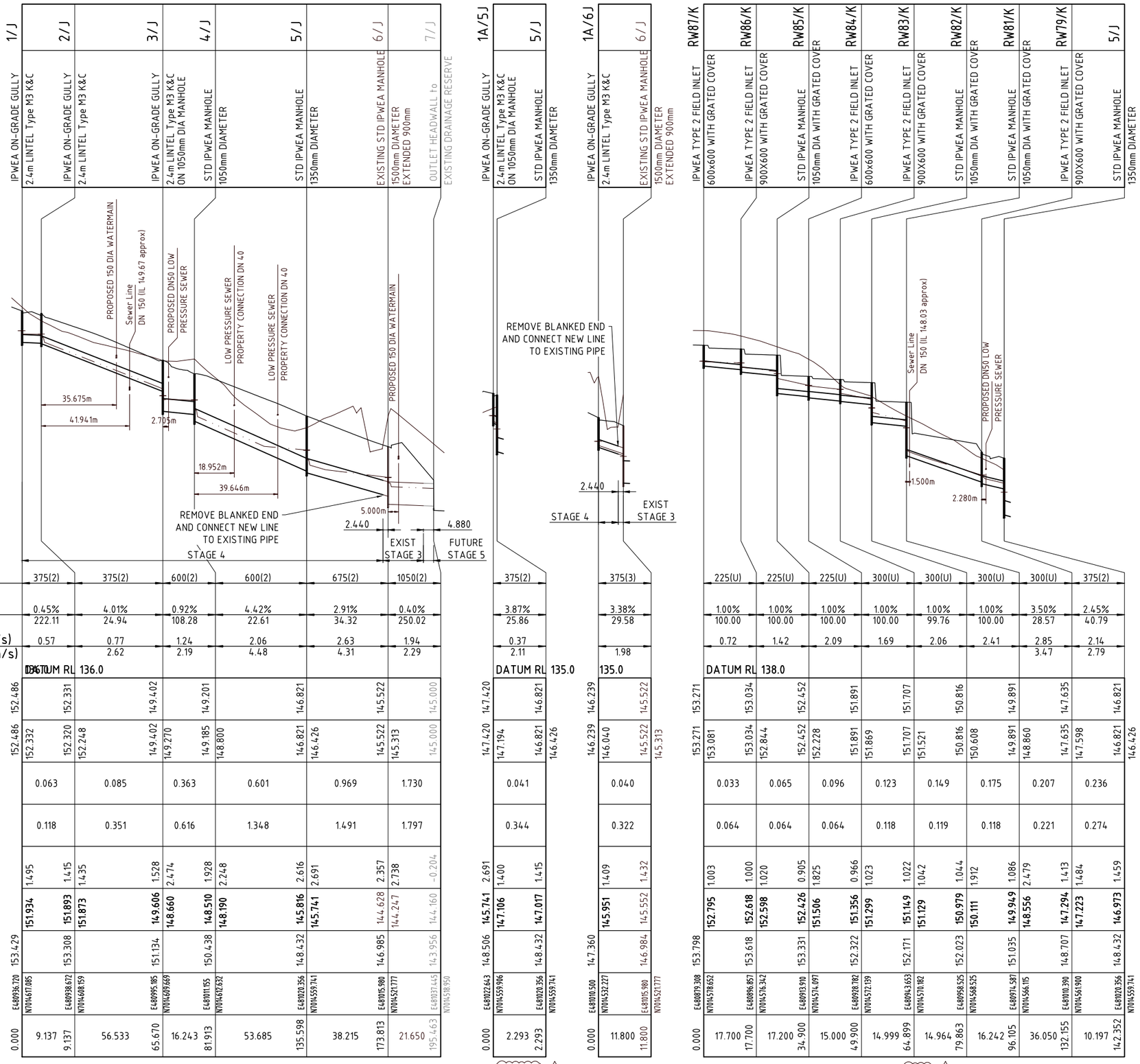

Fire Ant Movement Controls

To prevent the spread of fire ants, the Queensland Government has implemented controls that apply to individuals and commercial operators, to restrict the movement of materials that could carry fire ants including soil, turf, potted plants, mulch, baled hay or straw, animal manures, mining or quarry products.

Penalties apply for non-compliance with the movement controls. if you are unsure of your obligations under the Biosecurity Act 2014 contact the relevant Queensland State Government Department.

REFERENCE POINT LOCATION FOR STORMWATER DRAINAGE STRUCTURES

STRUCTURE TYPE	HORIZONTAL REFERENCE LOCATION (STRUCTURE SETOUT CO-ORDINATES)	VERTICAL REFERENCE LEVEL
MANHOLE AND ROOFWATER PIT	℄ MAIN SHAFT	FINISHED SURFACE LEVEL - MANHOLE/PIT COVER
TYPE 'A' GULLY PIT, LIP IN LINE	CENTRE OF GULLY	LIP OF KERB
FIELD INLET AND ROOFWATER PIT	CENTRE OF GULLY	TOP OF GRATE OR COVER
HEADWALL	℄ OF HEADWALL (END OF OUTLET PIPE)	INVERT OF OUTLET PIPE.

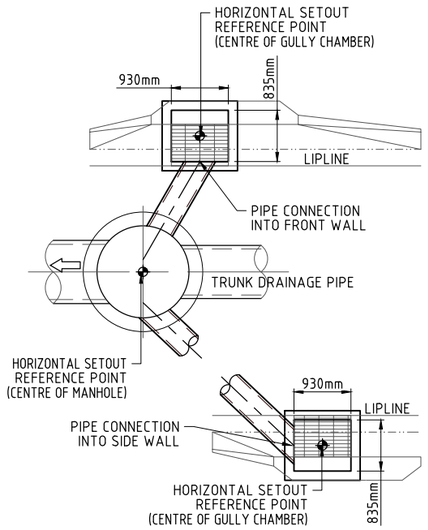

CONTRACTOR IS TO ENSURE THAT PIPE CONNECTIONS TO GULLY PITS ARE NOT CONSTRUCTED INTO THE CORNER OF TWO WALLS

GULLY PIT PIPE CONNECTION DETAIL

SCALE: NTS

REFER M2584E_4 D10 FOR ALLOWABLE STORMWATER PIPE CONSTRUCTION EQUIPMENT LOAD TABLE

DIAL BEFORE YOU DIG www.1100.com.au The Essential First Step

JFP URBAN CONSULTANTS
BRISBANE - SUNSHINE COAST - CENTRAL QLD
BRISBANE
JFP House - 76 Ernest Street, South Brisbane Qld 4101
P 07 3012 0100 W www.jfp.com.au
JFP URBAN CONSULTANTS PTY. LTD. A.C.N. 050 414 045
PLANNERS
URBAN DESIGNERS
SURVEYORS
ENGINEERS
LANDSCAPE ARCHITECTS

NORTH:

SCALE: 1:100 A1 — THIS SCALE SHOWN IS ORIGINAL DRAWING SCALE (A1) 1:100 (A3) 1:200

DO NOT SCALE FROM THIS DRAWING - USE ONLY DIMENSIONS PROVIDED - IF IN DOUBT PLEASE ENQUIRE

APPROVED — FOR AND ON BEHALF OF JFP URBAN CONSULTANTS PTY LTD

T.McKINNEY RPEQ 5087; A.FRASER RPEQ 5691; J.PAPPAS RPEQ 6086; S.MARSH RPEQ 8068; H.WATSON RPEQ 6200

DESIGNED CDV; DRAWN WN; CHECKED PNH; DATUM: AHD

ISSUE:	DETAILS:	DATE:	INIT:
B	INFORMATION REQUEST AMENDMENTS	03/04/23	CDV
A	ISSUE FOR OPERATIONAL WORKS APPROVAL	23/08/22	CDV

TITLE:

DRAINAGE LONGITUDINAL SECTIONS - LINE J 1A-5J 1A-6J & K

DFC (PROJECT MANAGEMENT) PTY LTD

'ARCHERS WAY' ESTATE - STAGE 4
AT 22-80 CASH STREET, D'AGUILAR

DENNIS FAMILY CORPORATION

DETAILS:
JOB NO: M2584E_4
PLAN: D05 ISSUE: B
MORETON BAY REGIONAL COUNCIL REF: DA/38032/2019/V3VR
FILE NAME: DRAINAGE SECTIONS.DWG

COPYRIGHT © 2011 JFP URBAN CONSULTANTS PTY LTD THIS DOCUMENT MAY NOT BE COPIED OR TRANSMITTED IN ANY FORM OR BY ANY MEANS IN PART OR IN WHOLE WITHOUT THE WRITTEN PERMISSION OF JFP URBAN CONSULTANTS PTY LTD.

Document Set ID: 66908359
Version: 1, Version Date: 09/05/2023
Moreton Bay Regional Council
Approved subject to conditions of Decision Notice DA/2023/0531
09/05/2023

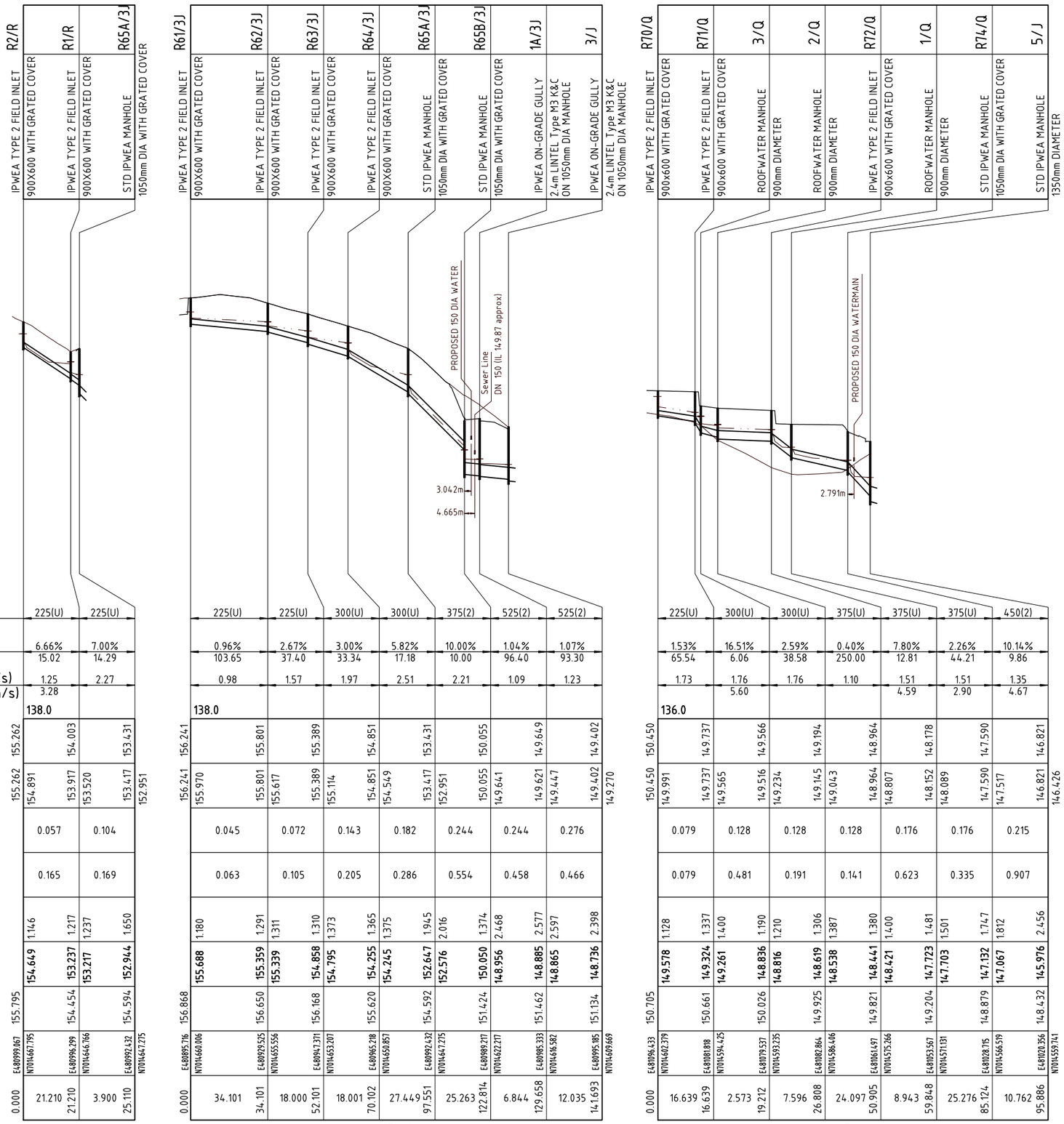

Fire Ant Movement Controls

To prevent the spread of fire ants, the Queensland Government has implemented controls that apply to individuals and commercial operators, to restrict the movement of materials that could carry fire ants including soil, turf, potted plants, mulch, baled hay or straw, animal manures, mining or quarry products.

Penalties apply for non-compliance with the movement controls. If you are unsure of your obligations under the Biosecurity Act 2014 contact the relevant Queensland State Government Department.

REFERENCE POINT LOCATION FOR STORMWATER DRAINAGE STRUCTURES

STRUCTURE TYPE	HORIZONTAL REFERENCE LOCATION (STRUCTURE SETOUT CO-ORDINATES)	VERTICAL REFERENCE LEVEL
MANHOLE AND ROOFWATER PIT	℄ MAIN SHAFT	FINISHED SURFACE LEVEL - MANHOLE/PIT COVER
TYPE 'A' GULLY PIT, LIP IN LINE	CENTRE OF GULLY	LIP OF KERB
FIELD INLET AND ROOFWATER PIT	CENTRE OF GULLY	TOP OF GRATE OR COVER
HEADWALL	℄ OF HEADWALL (END OF OUTLET PIPE)	INVERT OF OUTLET PIPE.

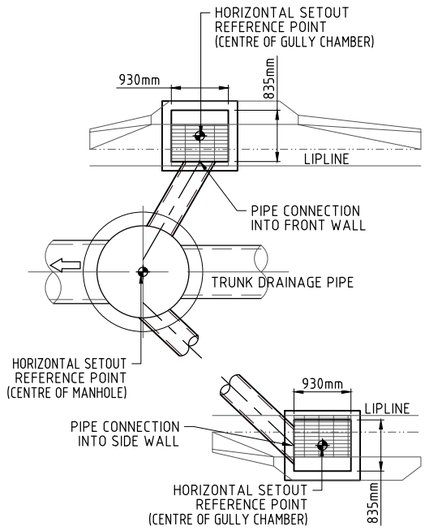

CONTRACTOR IS TO ENSURE THAT PIPE CONNECTIONS TO GULLY PITS ARE NOT CONSTRUCTED INTO THE CORNER OF TWO WALLS

GULLY PIT PIPE CONNECTION DETAIL
SCALE: NTS

REFER M2584E_4 D10 FOR ALLOWABLE STORMWATER PIPE CONSTRUCTION EQUIPMENT LOAD TABLE

DIAL BEFORE YOU DIG www.1100.com.au The Essential First Step

NORTH:

SCALE: Horizontal 1:1000 Vertical 1:100 — A1 — THIS SCALE SHOWN IS ORIGINAL DRAWING SCALE (A1) 1:100 (A1) 1:1000 Metres
DO NOT SCALE FROM THIS DRAWING - USE ONLY DIMENSIONS PROVIDED - IF IN DOUBT PLEASE ENQUIRE

APPROVED — FOR AND ON BEHALF OF JFP URBAN CONSULTANTS PTY LTD
T.McKINNEY RPEQ 5087; A.FRASER RPEQ 5691; J.PAPPAS RPEQ 6086; S.MARSH RPEQ 8068; H.WATSON RPEQ 6200

DESIGNED CDV; DRAWN WN; CHECKED PNH; DATUM: AHD

ISSUE:	DETAILS:	DATE:	INIT:
B	INFORMATION REQUEST AMENDMENTS	03/04/23	CDV
A	ISSUE FOR OPERATIONAL WORKS APPROVAL	23/08/22	CDV

JFP URBAN CONSULTANTS
BRISBANE - SUNSHINE COAST - CENTRAL QLD
BRISBANE
JFP House - 76 Ernest Street,
South Brisbane Qld 4101
P 07 3012 0100 W www.jfp.com.au
JFP URBAN CONSULTANTS PTY. LTD. A.C.N. 050 414 045
PLANNERS
URBAN DESIGNERS
SURVEYORS
ENGINEERS
LANDSCAPE ARCHITECTS

TITLE:

DRAINAGE LONGITUDINAL SECTIONS - LINE R 3J & Q

DFC (PROJECT MANAGEMENT) PTY LTD

'ARCHERS WAY' ESTATE - STAGE 4
AT 22-80 CASH STREET, D'AGUILAR

DENNIS FAMILY CORPORATION

DETAILS:
JOB NO: M2584E_4
PLAN: D06 ISSUE: B
MORETON BAY REGIONAL COUNCIL REF: DA/38032/2019/V3VR
FILE NAME: DRAINAGE SECTIONS.DWG

COPYRIGHT © 2011 JFP URBAN CONSULTANTS PTY LTD THIS DOCUMENT MAY NOT BE COPIED OR TRANSMITTED IN ANY FORM OR BY ANY MEANS IN PART OR IN WHOLE WITHOUT THE WRITTEN PERMISSION OF JFP URBAN CONSULTANTS PTY LTD.

6/04/2023 R:\M2584E\DISTANCE_AUTOSCAD\WORKING DRAWINGS\DRAINAGE SECTIONS

Document Set ID: 66908359
Version: 1, Version Date: 09/05/2023
Moreton Bay Regional Council
Approved subject to conditions of Decision Notice DA/2023/0531
09/05/2023

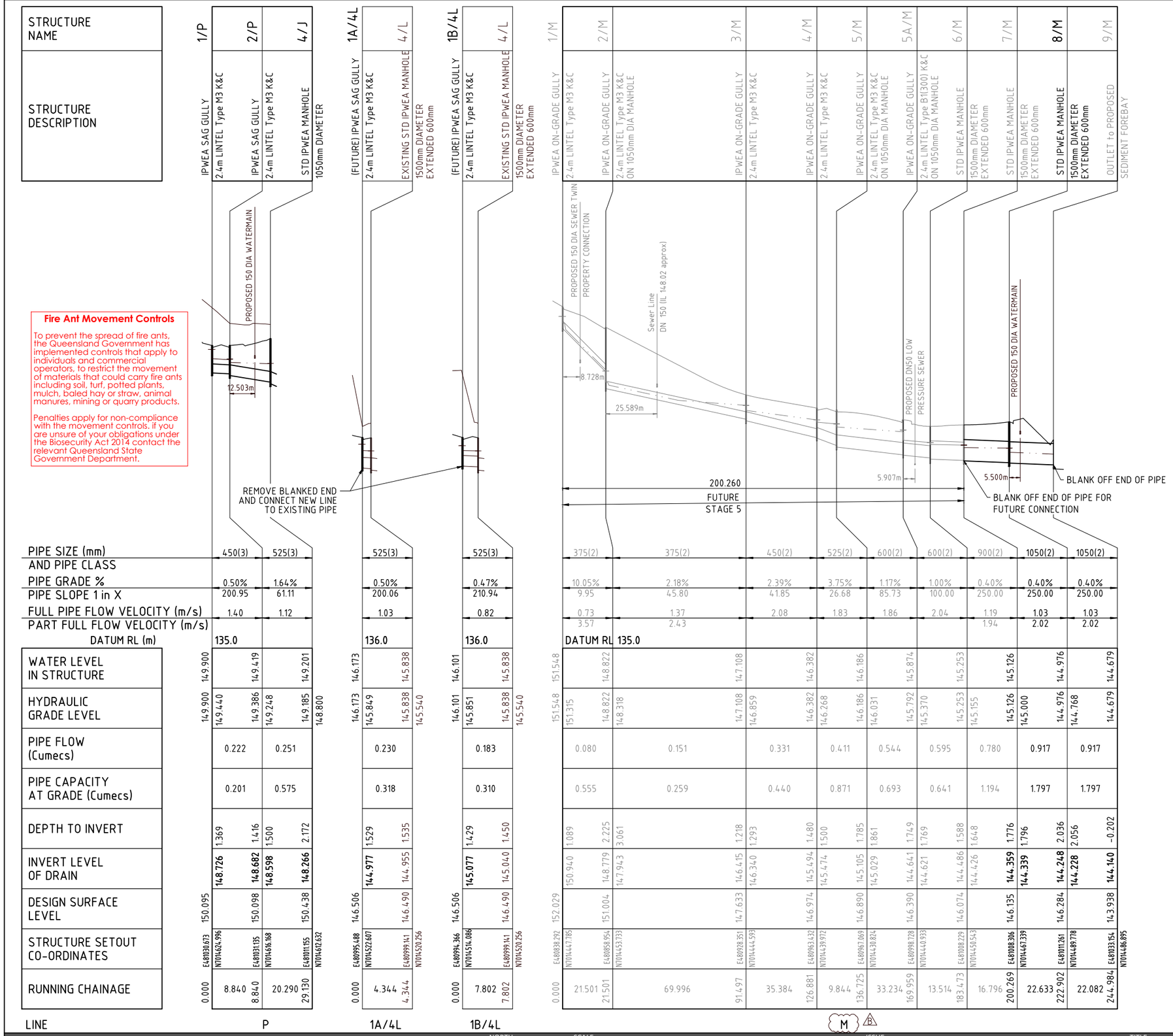

Fire Ant Movement Controls

To prevent the spread of fire ants, the Queensland Government has implemented controls that apply to individuals and commercial operators, to restrict the movement of materials that could carry fire ants including soil, turf, potted plants, mulch, baled hay or straw, animal manures, mining or quarry products.

Penalties apply for non-compliance with the movement controls. if you are unsure of your obligations under the Biosecurity Act 2014 contact the relevant Queensland State Government Department.

REFERENCE POINT LOCATION FOR STORMWATER DRAINAGE STRUCTURES

STRUCTURE TYPE	HORIZONTAL REFERENCE LOCATION (STRUCTURE SETOUT CO-ORDINATES)	VERTICAL REFERENCE LEVEL
MANHOLE AND ROOFWATER PIT	℄ MAIN SHAFT	FINISHED SURFACE LEVEL - MANHOLE/PIT COVER
TYPE 'A' GULLY PIT, LIP IN LINE	CENTRE OF GULLY	LIP OF KERB
FIELD INLET AND ROOFWATER PIT	CENTRE OF GULLY	TOP OF GRATE OR COVER
HEADWALL	℄ OF HEADWALL (END OF OUTLET PIPE)	INVERT OF OUTLET PIPE.

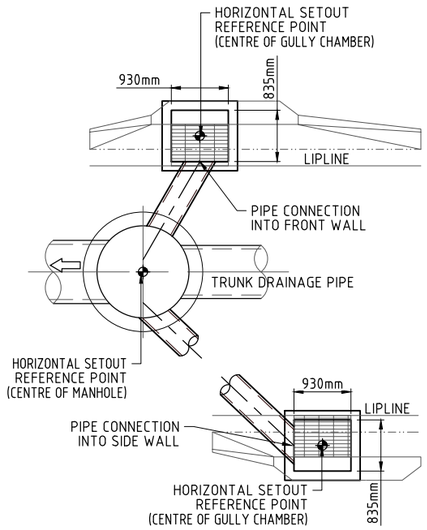

CONTRACTOR IS TO ENSURE THAT PIPE CONNECTIONS TO GULLY PITS ARE NOT CONSTRUCTED INTO THE CORNER OF TWO WALLS

GULLY PIT PIPE CONNECTION DETAIL
SCALE: NTS

REFER M2584E_4 D10 FOR ALLOWABLE STORMWATER PIPE CONSTRUCTION EQUIPMENT LOAD TABLE

DIAL BEFORE YOU DIG www.1100.com.au The Essential First Step

NORTH:

SCALE: Horizontal 1:1000 Vertical 1:100 — A1 — THIS SCALE SHOWN IS ORIGINAL DRAWING SCALE (A1) 1:100 (A1) 1:1000 Metres

DO NOT SCALE FROM THIS DRAWING - USE ONLY DIMENSIONS PROVIDED - IF IN DOUBT PLEASE ENQUIRE

APPROVED — FOR AND ON BEHALF OF JFP URBAN CONSULTANTS PTY LTD — T.McKINNEY RPEQ 5087 — A.FRASER RPEQ 5691 — J.PAPPAS RPEQ 6086 — S.MARSH RPEQ 8068 — H.WATSON RPEQ 6200

DESIGNED CDV DRAWN WN CHECKED PNH DATUM: AHD

ISSUE:	DETAILS:	DATE:	INIT:
B	INFORMATION REQUEST AMENDMENTS	03/04/23	CDV
A	ISSUE FOR OPERATIONAL WORKS APPROVAL	23/08/22	CDV

JFP URBAN CONSULTANTS
BRISBANE - SUNSHINE COAST - CENTRAL QLD
BRISBANE
JFP House - 76 Ernest Street, South Brisbane Qld 4101
P 07 3012 0100 W www.jfp.com.au
JFP URBAN CONSULTANTS PTY. LTD. A.C.N. 050 414 045
PLANNERS URBAN DESIGNERS SURVEYORS ENGINEERS LANDSCAPE ARCHITECTS

TITLE:

DRAINAGE LONGITUDINAL SECTIONS - LINE P, 1A-4L, 1B-4L & M

DFC (PROJECT MANAGEMENT) PTY LTD

'ARCHERS WAY' ESTATE - STAGE 4
AT 22-80 CASH STREET, D'AGUILAR

DENNIS FAMILY CORPORATION

DETAILS:
JOB NO: M2584E_4
PLAN: D07 ISSUE: B
MORETON BAY REGIONAL COUNCIL REF: DA/38032/2019/V3VR
FILE NAME: DRAINAGE SECTIONS.DWG

COPYRIGHT © 2011 JFP URBAN CONSULTANTS PTY LTD THIS DOCUMENT MAY NOT BE COPIED OR TRANSMITTED IN ANY FORM OR BY ANY MEANS IN PART OR IN WHOLE WITHOUT THE WRITTEN PERMISSION OF JFP URBAN CONSULTANTS PTY LTD.

6/04/2023 N:\M2584E\STAGE_4\D07&SCH\WORKING DRAWINGS\DRAINAGE SECTIONS

Moreton Bay Regional Council
Document Set ID: 66908359
Version: 1, Version Date: 09/05/2023
Approved subject to conditions of Decision Notice DA/2023/0531
09/05/2023

LOCATION					TIME			SUB-CATCHMENT RUNOFF					
DESIGN ARI (yrs)	STRUCTURE No.	DRAIN SECTION	SUB-CATCHMENTS CONTRIBUTING	LAND USE	SLOPE OF CATCHMENT (%)	tc SUB-CATCHMENT TIME OF CONC. (min)	I RAINFALL INTENSITY (mm/h)	C10 10yr RUNOFF CO-EFFICIENT	C CO-EFFICIENT OF RUNOFF	A SUB-CATCHMENT AREA (ha)	C×A EQUIVALENT AREA (ha)	+CA SUM OF (C × A) (ha)	Q SUB-CATCHMENT DISCHARGE (l/s)
10 100	R63/3J	R63/3J to R64/3J	R61/3J;R62/3J;R63/3J	ALLOT		5.00 5.00	216 329		0.91 1.00	0.126	0.115 0.126	0.115 0.126	69 115
10 100	R64/3J	R64/3J to R65A/3J	R61/3J;R62/3J;R63/3J;R64/3J	ALLOT		5.00 5.00	216 329		0.91 1.00	0.069	0.063 0.069	0.063 0.069	38 63
10 100	RW87/K	RW87/K to RW86/K	RW87/K	ALLOT		5.00 5.00	216 329		0.91 1.00	0.060	0.055 0.060	0.055 0.060	33 55
10 100	RW86/K	RW86/K to RW85/K	RW87/K;RW86/K	ALLOT		5.00 5.00	216 329		0.91 1.00	0.060	0.055 0.060	0.055 0.060	33 55
10 100	RW85/K	RW85/K to RW84/K	RW87/K;RW86/K;RW85/K	ALLOT		5.00 5.00	216 329		0.91 1.00	0.060	0.055 0.060	0.055 0.060	33 55
10 100	RW84/K	RW84/K to RW83/K	RW87/K;RW86/K;RW85/K;RW84/K	ALLOT		5.00 5.00	216 329		0.91 1.00	0.053	0.048 0.053	0.048 0.053	29 48
10 100	RW83/K	RW83/K to RW82/K	RW87/K;RW86/K;RW85/K;RW84/K;RW83/K	ALLOT		5.00 5.00	216 329		0.91 1.00	0.053	0.048 0.053	0.048 0.053	29 48
10 100	RW82/K	RW82/K to RW81/K	RW87/K;RW86/K;RW85/K;RW84/K;RW83/K;RW82/K	ALLOT		5.00 5.00	216 329		0.91 1.00	0.053	0.048 0.053	0.048 0.053	29 48
10 100	RW81/K	RW81/K to RW79/K	RW87/K;RW86/K;RW85/K;RW84/K;RW83/K;RW82/K;RW81/K	ALLOT		5.00 5.00	216 329		0.91 1.00	0.064	0.058 0.064	0.058 0.064	35 58
10 100	RW79/K	RW79/K to 5/J	RW87/K;RW86/K;RW85/K;RW84/K;RW83/K;RW82/K;RW81/K;RW79/K	ALLOT		5.00 5.00	216 329		0.91 1.00	0.061	0.056 0.061	0.056 0.061	34 56
10 100	R2/R	R2/R to R1/R	R2/R	ALLOT		5.00 5.00	216 329		0.91 1.00	0.100	0.091 0.100	0.091 0.100	55 91
10 100	R1/R	R1/R to R65A/3J	R2/R;R1/R	ALLOT		5.00 5.00	216 329		0.91 1.00	0.083	0.076 0.083	0.076 0.083	46 76
10 100	R65A/3J	R65A/3J to R65B/3J	R61/3J;R62/3J;R63/3J;R64/3J;R2/R;R1/R;R65A/3J	ALLOT		5.00 5.00	216 329		0.91 1.00	0.110	0.100 0.110	0.100 0.110	60 101
10 100	R65B/3J	R65B/3J to 1A/3J	R61/3J;R62/3J;R63/3J;R64/3J;R2/R;R1/R;R65A/3J;R65B/3J	ALLOT		5.00 5.00	216 329		0.91 1.00	0.004	0.004 0.004	0.004 0.004	2 4
10 100	1A/3J	1A/3J to 3/J	R61/3J;R62/3J;R63/3J;R64/3J;R2/R;R1/R;R65A/3J;R65B/3J;1A/3J	ROAD/ALLOT		10.00 10.00	168 254		0.88 1.00	0.244	0.215 0.244	0.215 0.244	100 172
10 100	R70/Q	R70/Q to R71/Q	RW70/Q	ALLOT		5.00 5.00	216 329		0.91 1.00	0.140	0.127 0.140	0.127 0.140	76 128
10 100	R71/Q	R71/Q to 3/Q	RW70/Q;RW71/Q	ALLOT		5.00 5.00	216 329		0.91 1.00	0.087	0.079 0.087	0.079 0.087	47 80

STRUCTURE No.	INLET DESIGN							DRAIN DESIGN												
	FLOW IN K&C (INC. BYPASS) (l/s)	ROAD GRADE AT INLET (%)	MINOR FLOW ROAD CAPACITY (l/s)	INLET TYPE	Qg FLOW INTO INLET (l/s)	Qb BYPASS FLOW (l/s)	BYPASS STRUCTURE No.	tc CRITICAL TIME OF CONC. (min)	I RAINFALL INTENSITY (mm/h)	+CA TOTAL (C × A) (ha)	Qt MAJOR TOTAL FLOW (l/s)	Qm MAJOR SURFACE FLOW CAPACITY (l/s)	Qs MAJOR SURFACE FLOW (l/s)	Qp PIPE FLOW (l/s)	L REACH LENGTH (m)	S PIPE GRADE (%)	PIPE / BOX DIMENSIONS (CLASS) (mm)	V FLOW VELOCITY (m/s)	T TIME OF FLOW IN REACH (min)	STRUCTURE CHART No.
R63/3J	69 FLOW WIDTH 0.140Dp (0.000 3 month)	2.00	79	31S.15	69	0	R64/3J	5.00 5.00	216 329	0.230 0.252	230			143 (Pipe flow set by user)	18.000	3.00	300(U)	1.97	0.15	
R64/3J	38 FLOW WIDTH 0.119Dp (0.000 3 month)	2.00	63	53S.15	38	0	R65A/3J	5.00 5.00	216 329	0.293 0.321	293			182 (Pipe flow set by user)	26.949	5.93	300(U)	2.51	0.18	
RW87/K	33 FLOW WIDTH 0.113 (0.000 3 month)	0.50	63	53S.15	33	0	RW86/K	5.00 5.00	216 329	0.055 0.060	55			33 (Pipe flow= Grate flow)	17.700	0.97	225(U)	0.72	0.30	
RW86/K	33 FLOW WIDTH 0.113 (0.000 3 month)	0.50	63	53S.15	33	0	RW85/K	5.30 5.30	212 321	0.110 0.120	107			65 (Pipe flow= Sum upstr atten flows)	17.200	1.00	225(U)	1.42	0.20	
RW85/K	33 FLOW WIDTH 0.113 (0.000 3 month)	0.50	63	53S.15	33	0	RW84/K	5.50 5.50	209 317	0.165 0.180	159			96 (Pipe flow= Sum upstr atten flows)	15.000	1.00	225(U)	2.09	0.12	
RW84/K	29 FLOW WIDTH 0.108 (0.000 3 month)	0.50	63	53S.15	29	0	RW83/K	5.62 5.62	208 314	0.213 0.233	203			123 (Pipe flow= Sum upstr atten flows)	14.999	1.00	300(U)	1.69	0.15	
RW83/K	29 FLOW WIDTH 0.108 (0.000 3 month)	0.50	63	53S.15	29	0	RW82/K	5.77 5.77	206 311	0.261 0.286	247			149 (Pipe flow= Sum upstr atten flows)	14.964	1.00	300(U)	2.06	0.12	
RW82/K	29 FLOW WIDTH 0.108 (0.000 3 month)	0.50	63	53S.15	29	0	RW81/K	5.89 5.89	204 308	0.309 0.339	290			175 (Pipe flow= Sum upstr atten flows)	16.742	1.03	300(U)	2.41	0.12	
RW81/K	35 FLOW WIDTH 0.116 (0.000 3 month)	0.50	63	53S.15	35	0	RW79/K	6.01 6.01	203 306	0.367 0.403	343			207 (Pipe flow= Sum upstr atten flows)	35.550	3.50	300(U)	2.85	0.21	
RW79/K	34 FLOW WIDTH 0.114 (0.000 3 month)	3.72	63	53S.15	34	0	1A/6J	6.22 6.22	201 302	0.423 0.464	389			236 (Pipe flow= Sum upstr atten flows)	10.641	2.35	375(2)	2.14	0.08	
R2/R	55 FLOW WIDTH 0.140Dp (0.000 3 month)	2.00	63	53S.15	55	0	R1/R	5.00 5.00	216 329	0.091 0.100	91			57 (Pipe flow set by user)	21.210	5.95	225(U)	1.25	0.28	
R1/R	46 FLOW WIDTH 0.129Dp (0.000 3 month)	2.00	63	53S.15	46	0		5.00 5.00	216 329	0.167 0.183	167			104 (Pipe flow set by user)	3.900	7.00	225(U)	2.27	0.03	
R65A/3J	60 FLOW WIDTH 0.146Dp (0.000 3 month)	2.00	63	53S.15	60	0	R65B/3J	5.00 5.00	216 329	0.560 0.614	561			244 (Pipe flow set by user)	25.263	10.00	375(2)	2.21	0.19	
R65B/3J	2 FLOW WIDTH 0.055Dp (0.000 3 month)	2.00	63	53S.15	2	0	1A/3J	5.19 5.19	213 324	0.564 0.618	556			244 (Pipe flow= Sum upstr atten flows)	6.844	1.04	525(2)	1.09	0.10	
1A/3J	117 FLOW WIDTH 1.699 (0.000 3 month)	4.92	710	1	83	33	1/P	10.00 10.00	168 254	0.779 0.862	608			276 (Pipe flow= Sum upstr atten flows)	12.930	1.00	525(2)	1.23	0.18	
R70/Q	76 FLOW WIDTH 0.147 (0.000 3 month)	0.50	79	31S.15	76	0	R71/Q	5.00 5.00	216 329	0.127 0.140	128			79 (Pipe flow set by user)	16.639	1.53	225(U)	1.73	0.16	
R71/Q	47 FLOW WIDTH 0.131 (0.000 3 month)	0.50	63	53S.15	47	0	R72/Q	5.00 5.00	216 329	0.206 0.227	207			128 (Pipe flow set by user)	2.573	16.51	300(U)	1.76	0.02	

STRUCTURE No.	STRUCTURE RATIOS FOR 'K' VALUE CALCULATIONS	HEADLOSSES									PART FULL		DESIGN LEVELS						
		V2/2g VELOCITY HEAD (m)	Ku U/S HEADLOSS COEFFICIENT	hu U/S PIPE STRUCT. HEADLOSS (m)	Kl LAT. HEADLOSS CO-EFFICIENT	hl LAT. PIPE STRUCT. HEADLOSS (m)	Kw W.S.E CO-EFFICIENT	hw CHANGE IN W.S.E (m)	Sf PIPE FRICTION SLOPE (%)	hf PIPE FRICTION HEADLOSS (L × Sf) (m)	DEPTH (m)	Vp VELOCITY (m/s)	OBVERT LEVELS (m)	DRAIN SECTION H.G.L (m)	UPSTREAM H.G.L (m)	LAT. H.G.L (m)	W.S.E. (m)	SURFACE OR K&C INVERT LEVEL (m)	STRUCTURE No.
R63/3J	Qg 0.071 Qo 0.143 Do 300 CHART 33 Angle 1 S/Do 2.5 Du/Do 0.75 Qg/Qo 0.50 K 1.15 S/Do 1.95 cor 0.24 Ku 1.39 Kw 1.39	0.198	1.39	0.275			1.39	0.275	1.46	0.263			155.099 154.559	155.114 154.851	155.389		155.389	156.005	R63/3J
R64/3J	Qg 0.039 Qo 0.182 Do 300 CHART 33 Angle 0 S/Do 2.5 Du/Do 1.00 Qg/Qo 0.21 K 0.85 S/Do 1.99 cor 0.09 Ku 0.94 Kw 0.94	0.321	0.94	0.302			0.94	0.302	2.36	0.637	0.175	4.20	154.549 152.951	154.549 153.417	154.851		154.851	155.455	R64/3J
RW87/K	Qg 0.033 Qo 0.033 Do 225 CHRT 32: Vo2/2gDo 0.11 H/Do 0.00 Kg side flow 7.74 end flow 5.93 Part full downstream pipe	0.026	1.00	0.034	Upstream HGL 153.042 below outlet pipe obv 153.051 Set Kp to 1		1.00	0.034	0.27	0.047	0.124	1.40	153.051 152.879	153.008 152.961	153.042		153.042	153.779	RW87/K
RW86/K	Qg 0.032 Qo 0.065 Do 225 Flow RW87/K made eqv grate flow CHRT 32: Vo2/2gDo 0.43 H/Do 0.02 Kg side flow 4.13 end flow 3.59 K vals above for stepped pipes as grate flow grate flow decreased by 0.032 from RW87/K	0.103	1.85	0.191	CHART 33 Angle 0 S/Do 2.5 Du/Do 1.00 Qg/Qo 0.50 K 1.51 S/Do 1.81 cor 0.34 Ku 1.85 Kw 1.85 K vals step pipes as pipe flow Ku 1.85 Kw 1.85		1.85	0.191	1.03	0.176			152.766 152.594	152.771 152.594	152.961		152.961	153.596	RW86/K
RW85/K	Qg 0.032 Qo 0.096 Do 225 Flow RW86/K made eqv grate flow CHRT 32: Vo2/2gDo 0.92 H/Do 1.99 Kg side flow 2.18 end flow 2.07 K vals above for stepped pipes as grate flow grate flow decreased by 0.064 from RW86/K	0.223	1.01	0.224	CHART 33 Angle 1 S/Do 2.5 Du/Do 1.00 Qg/Qo 0.33 K 1.17 S/Do 3.92 cor -0.16 Ku 1.01 Kw 1.01 K vals step pipes as pipe flow Ku 1.01 Kw 1.01		1.01	0.224	2.24	0.336			151.747 151.597	152.228 151.891	152.452		152.452	153.316	RW85/K
RW84/K	Qg 0.028 Qo 0.123 Do 300 CHART 33 Angle 1 S/Do 2.5 Du/Do 0.75 Qg/Qo 0.23 K 0.05 S/Do 1.95 cor 0.10 Ku 0.15 Kw 0.15	0.146	0.15	0.022			0.15	0.022	1.08	0.162			151.603 151.453	151.869 151.707	151.891		151.891	152.295	RW84/K
RW83/K	Qg 0.027 Qo 0.149 Do 300 CHART 33 Angle 1 S/Do 2.5 Du/Do 1.00 Qg/Qo 0.18 K 0.76 S/Do 1.90 cor 0.10 Ku 0.86 Kw 0.86	0.216	0.86	0.186			0.86	0.186	1.59	0.238			151.433 151.283	151.521 151.283	151.707		151.707	152.152	RW83/K
RW82/K	Qg 0.027 Qo 0.175 Do 300 Flow RW83/K made eqv grate flow CHRT 32: Vo2/2gDo 0.97 H/Do 0.64 Kg side flow 2.58 end flow 2.40 K vals above for stepped pipes as grate flow grate flow decreased by 0.148 from RW83/K	0.296	0.70	0.208	CHART 33 Angle 3 S/Do 2.5 Du/Do 1.00 Qg/Qo 0.16 K 0.68 S/Do 2.32 cor 0.02 Ku 0.70 Kw 0.70 K vals step pipes as pipe flow Ku 0.70 Kw 0.70		0.70	0.208	2.19	0.366			150.425 150.253	150.619 150.253	150.827		150.827	152.023	RW82/K
RW81/K	Qg 0.033 Qo 0.207 Do 300 Flow RW82/K made eqv grate flow CHRT 32: Vo2/2gDo 1.36 H/Do 0.00 Kg side flow 2.49 end flow 2.33 K vals above for stepped pipes as grate flow	0.414	2.49	1.031			2.49	1.031	3.06	1.086	0.233	3.47	148.842 147.598	148.842 147.635	149.873		149.873	151.091	RW81/K
RW79/K	Qg 0.031 Qo 0.236 Do 375 CHART 33 Angle 2 S/Do 2.5 Du/Do 0.80 Qg/Qo 0.13 K -0.06 S/Do 1.10 cor 0.22 Ku 0.16 Kw 0.16	0.233	0.16	0.037			0.16	0.037	1.82	0.193	0.272	2.74	147.598 147.348	147.598 147.246	147.635		147.635	148.716	RW79/K
R2/R	Qg 0.057 Qo 0.057 Do 225 CHRT 32: Vo2/2gDo 0.33 H/Do 0.00 Kg side flow 4.67 end flow 3.98	0.080	4.67	0.371			4.67	0.371	0.79	0.168	0.101	3.14	154.741 153.478	154.741 153.917	155.112		155.112	155.645	R2/R
R1/R	Qg 0.047 Qo 0.104 Do 225 Angle 90 Chart 47 S/Do 2.5 chartdeg Du/Do 1.00 K0 1.92 K0.5 2.12 Qu/Qo 0.55 Cg 0.93 K 2.11 S/Do 4.0 K0 1.91 K0.5 1.66 K 1.67 S/Do 3.0 K0 2.00 K0.5 1.89 K 1.90	0.263	1.51	0.397	Interp val for S/Do 3.26 Kw 1.84 CHART 46 S/Do 4.0 K0 1.53 K0.5 1.43 K 1.44 S/Do 3.0 K0 1.74 K0.5 1.52 K 1.53 Interp val for S/Do 3.26 Ku 1.51		1.84	0.483	2.64	0.103			153.458 153.185	153.520 153.417	153.917		154.003	154.304	R1/R
R65A/3J	Qg 0.060 Qo 0.244 Do 375 Flow R1/R made eqv grate flow Angle 90 Chart 47 S/Do 2.5 chartdeg Du/Do 0.80 K0 2.14 K0.5 2.31 Qu/Qo 0.75 Cg 1.19 K 2.34 S/Do 3.0 K0 2.11 K0.5 1.99 K 1.97 S/Do 2.5 K0 2.14 K0.5 2.31 K 2.34 Interp val for S/Do 2.53 Kw 2.31 CHART 46 S/Do 3.0 K0 1.72 K0.5 1.87 K 1.90 S/Do 2.5 K0 1.63 K0.5 2.02 K 2.10 Interp val for S/Do 2.53 Ku 2.08 K vals above for stepped pipes as grate flow grate flow decreased by 0.104 from R1/R	0.249	1.87	0.466	Routine 2.3 CHART 49 High vel lat R1/R Dhv 225 Qhv 0.104 Dhv/Dlv 0.8 Dhv/Do 0.60 Qhv/Qo 0.43 H 3.19 Low vel latrl R64/3J Dlv 300 Qlv 0.182 Dlv/Do 0.80 Qlv/Qo 0.75 L 1.46 H-L 1.73 Ku=Kw= 1.80 K vals step pipes as pipe flow Ku 1.80 Kw 1.80 Averaged Ku 1.87 Kw 1.93		1.93	0.480	1.94	0.490	0.174	4.86	152.951 150.425	152.951 150.224	153.417		153.431	154.444	R65A/3J
R65B/3J	Qg 0.002 Qo 0.244 Do 525 Flow R65A/3J made eqv grate flow CHRT 32: Vo2/2gDo 0.11 H/Do 0.29 Kg side flow 6.81 end flow 5.26 K vals above for stepped pipes as grate flow	0.061	6.81	0.413			6.81	0.413	0.29	0.020			149.490 149.419	149.644 149.624	150.057		150.057	151.360	R65B/3J
1A/3J	Qg 0.083 Qo 0.276 Do 525 Angle 94 Chart 47 S/Do 2.5 chartdeg Du/Do 1.00 K0 1.92 K0.5 2.12 Qu/Qo 0.70 Cg 0.68 K 2.06 S/Do 2.0 K0 2.44 K0.5 2.40 K 2.41 S/Do 1.5 K0 2.67 K0.5 2.58 K 2.61	0.077	2.25	0.173	Interp val for S/Do 1.47 Kw 2.62 CHART 46 S/Do 2.0 K0 2.04 K0.5 1.92 K 1.96 S/Do 1.5 K0 2.09 K0.5 2.31 K 2.24 Interp val for S/Do 1.47 Ku 2.25		2.62	0.202	0.38	0.049			149.399 149.270	149.451 149.402	149.624		149.653	151.462	1A/3J
R70/Q	Qg 0.079 Qo 0.079 Do 225 CHRT 32: Vo2/2gDo 0.63 H/Do 0.71 Kg side flow 3.01 end flow 2.74	0.153	3.01	0.459			3.01	0.459	1.53	0.254			149.819 149.565	149.991 149.737	150.450		150.450	150.705	R70/Q
R71/Q	Qg 0.049 Qo 0.128 Do 300 CHART 33 Angle 1 S/Do 2.5 Du/Do 0.75 Qg/Qo 0.38 K 0.70 S/Do 1.57 cor 0.39 Ku 1.09 Kw 1.09	0.158	1.09	0.172			1.09	0.172	1.17	0.030	0.107	5.60	149.565 149.140	149.565 149.516	149.737		149.737	150.661	R71/Q

DIAL BEFORE YOU DIG
www.1100.com.au
The Essential First Step

URBAN CONSULTANTS
BRISBANE - SUNSHINE COAST - CENTRAL QLD
BRISBANE
JFP House - 76 Ernest Street,
South Brisbane Qld 4101
P 07 3012 0100 W www.jfp.com.au
JFP URBAN CONSULTANTS PTY. LTD. A.C.N. 050 414 045

PLANNERS
URBAN DESIGNERS
SURVEYORS
ENGINEERS
LANDSCAPE ARCHITECTS

NORTH:

SCALE:
THIS SCALE SHOWN IS ORIGINAL DRAWING SCALE
A1
DO NOT SCALE FROM THIS DRAWING - USE ONLY DIMENSIONS PROVIDED - IF IN DOUBT PLEASE ENQUIRE

APPROVED
FOR AND ON BEHALF OF JFP URBAN CONSULTANTS PTY LTD
☐ T.McKINNEY RPEQ 5087 ☐ A.FRASER RPEQ 5691 ☐ J.PAPPAS RPEQ 6086
☐ S.MARSH RPEQ 8068 ☑ H.WATSON RPEQ 6200

DESIGNED: CDV
DRAWN: WN
CHECKED: PNH
DATUM: AHD

ISSUE:	DETAILS:	DATE:	INIT:
A	ISSUE FOR OPERATIONAL WORKS APPROVAL	23/08/22	CDV

TITLE:
DRAINAGE CALCULATIONS TABLE
SHEET 1 OF 3
DFC (PROJECT MANAGEMENT) PTY LTD
'ARCHERS WAY' ESTATE - STAGE 4
AT 22-80 CASH STREET, D'AGUILAR

DENNIS FAMILY CORPORATION

DETAILS:
JOB NO: M2584E_4
PLAN: D08 ISSUE: A
MORETON BAY REGIONAL COUNCIL REF: DA/38032/2019/V3VR
FILE NAME: DRAINAGE SECTIONS.DWG

6/04/2023 N:\M2584\STAGE_4\DESIGN\WORKING DRAWINGS\DRAINAGE SECTIONS

COPYRIGHT © 2011 JFP URBAN CONSULTANTS PTY LTD THIS DOCUMENT MAY NOT BE COPIED OR TRANSMITTED IN ANY FORM OR BY ANY MEANS IN PART OR IN WHOLE WITHOUT THE WRITTEN CONSENT OF JFP URBAN CONSULTANTS PTY LTD.

Document Set ID: 66908459
Version: 1, Version Date: 09/05/2023

Moreton Bay Regional Council
Approved subject to conditions of Decision Notice DA/2023/0531 09/05/2023

	LOCATION				TIME	SUB-CATCHMENT RUNOFF								INLET DESIGN							DRAIN DESIGN															HEADLOSSES					PART FULL						DESIGN LEVELS						
						tc	I	C10	C	A	C×A	+CA	Q					Qg	Qb		tc	I	+CA	Qt	Qm	Qs	Qp	L	S		V	T			V2/2g	Ku	hu	Kl	hl	Kw	hw	Sf	hf		Vp							
DESIGN ARI	STRUCTURE No.	DRAIN SECTION	SUB-CATCHMENTS CONTRIBUTING	LAND USE	SLOPE OF CATCHMENT	SUB-CATCHMENT TIME OF CONC.	RAINFALL INTENSITY	10yr RUNOFF CO-EFFICIENT	CO-EFFICIENT OF RUNOFF	SUB-CATCHMENT AREA	EQUIVALENT AREA	SUM OF (C × A)	SUB-CATCHMENT DISCHARGE	FLOW IN K&C (INC. BYPASS)	ROAD GRADE AT INLET	MINOR FLOW ROAD CAPACITY	INLET TYPE	FLOW INTO INLET	BYPASS FLOW	BYPASS STRUCTURE No.	CRITICAL TIME OF CONC.	RAINFALL INTENSITY	TOTAL (C × A)	MAJOR TOTAL FLOW	MAJOR SURFACE FLOW CAPACITY	MAJOR SURFACE FLOW	PIPE FLOW	REACH LENGTH	PIPE GRADE	PIPE / BOX DIMENSIONS (CLASS)	FLOW VELOCITY	TIME OF FLOW IN REACH	STRUCTURE CHART No.	STRUCTURE RATIOS FOR 'K' VALUE CALCULATIONS	VELOCITY HEAD	U/S HEADLOSS COEFFICIENT	U/S PIPE STRUCT. HEADLOSS	LAT. HEADLOSS CO-EFFICIENT	LAT. PIPE STRUCT. HEADLOSS	W.S.E CO-EFFICIENT	CHANGE IN W.S.E	PIPE FRICTION SLOPE	PIPE FRICTION HEADLOSS (L × Sf)	DEPTH	VELOCITY	OBVERT LEVELS	DRAIN SECTION H.G.L	UPSTREAM H.G.L	LAT. H.G.L	W.S.E.	SURFACE OR K&C INVERT LEVEL	STRUCTURE No.
yrs					%	min	mm/h			ha	ha	ha	l/s	l/s	%	l/s		l/s	l/s		min	mm/h	ha	l/s	l/s	l/s	l/s	m	%	mm	m/s	min			m		m		m		m	%	m	m	m/s	m	m	m	m	m	m	
10 100	R61/3J	R61/3J to R62/3J	R61/3J	ALLOT		5.00 5.00	216 329		0.91 1.00	0.079	0.072 0.079	0.072 0.079	43 72	43 FLOW WIDTH 0.126	2.00	63 Dp (0.000	53S.15 3 month)	43	0	R62/3J	5.00 5.00	216 329	0.072 0.079	72			45 (Pipe flow set by user)	21.319	1.54	225(U)	0.98	0.36		Qg 0.045 Qo 0.045 Do 225 CHRT 32: Vo2/2gDo 0.20 H/Do 0.00 Kg side flow 5.89 end flow 4.84	0.049	5.89	0.289			5.89	0.289	0.50	0.106	0.130	1.79	155.929 155.600	155.929 155.801	156.218		156.218	156.834	R61/3J
10 100	R62/3J	R62/3J to R63/3J	R61/3J;R62/3J	ALLOT		5.00 5.00	216 329		0.91 1.00	0.047	0.043 0.047	0.043 0.047	26 43	26 FLOW WIDTH 0.105	2.00	63 Dp (0.000	53S.15 3 month)	26	0	R63/3J	5.00 5.00	216 329	0.115 0.126	115			72 (Pipe flow set by user)	18.000	2.67	225(U)	1.57	0.19		Qg 0.027 Qo 0.072 Do 225 CHART 33 Angle 1 S/Do 2.5 Du/Do 1.00 Qg/Qo 0.37 K 1.27 S/Do 1.91 cor 0.19 Ku 1.46 Kw 1.46	0.126	1.46	0.184			1.46	0.184	1.27	0.228			155.580 155.099	155.617 155.389	155.801		155.801	156.485	R62/3J
10 100	3/Q	3/Q to 2/Q	RW70/Q;RW71/Q	ALLOT													41				5.02 5.02	216 328	0.206 0.227	207			128 (Pipe flow= Sum upstr atten flows)	7.596	2.59	300(U)	1.76	0.07		Qo 0.128 Do 300 CHART 50 Du/Do1.00 alpha 88 K'w 0.30 Vu 1.81 WSE 0.33 Ku 1.79 Kw 2.11	0.158	1.79	0.282			2.11	0.332	1.17	0.089			149.120 148.923	149.234 149.145	149.516		149.566	150.026	3/Q
10 100	2/Q	2/Q to R72/Q	RW70/Q;RW71/Q	ALLOT													41				5.09 5.09	215 327	0.206 0.227	206			128 (Pipe flow= Sum upstr atten flows)	24.097	0.40	375(U)	1.10	0.37		Qo 0.128 Do 375 CHART 50 Du/Do0.80 alpha 88 K'w 0.30 Vu 1.81 WSE 0.15 Ku 1.64 Kw 2.45	0.062	1.64	0.102			2.45	0.151	0.33	0.079			148.923 148.827	149.043 148.964	149.145		149.194	149.925	2/Q
10 100	R72/Q	R72/Q to 1/Q	RW70/Q;RW71/Q;RW72/Q	ALLOT		5.00 5.00	216 329		0.91 1.00	0.085	0.077 0.085	0.077 0.085	46 78	46 FLOW WIDTH 0.130	0.23	63 (0.000	53S.15 3 month)	46	0	R74/Q	5.00 5.00	216 329	0.283 0.312	285			176 (Pipe flow set by user)	8.943	7.80	375(U)	1.51	0.10		Qg 0.048 Qo 0.176 Do 375 CHART 33 Angle 0 S/Do 2.5 Du/Do 1.00 Qg/Qo 0.27 K 1.01 S/Do 1.41 cor 0.34 Ku 1.35 Kw 1.35	0.116	1.35	0.157			1.35	0.157	0.62	0.056	0.140	4.59	148.807 148.109	148.807 148.152	148.964		148.964	149.821	R72/Q
10 100	1/Q	1/Q to R74/Q	RW70/Q;RW71/Q;RW72/Q	ALLOT													41				5.10 5.10	215 326	0.283 0.312	283			176 (Pipe flow= Sum upstr atten flows)	25.276	2.26	375(U)	1.51	0.28		Qo 0.176 Do 375 CHART 50 Du/Do1.00 alpha 17 K'w 0.20 Vu 1.59 WSE 0.09 Ku 0.54 Kw 0.77	0.116	0.54	0.063			0.77	0.089	0.62	0.157	0.198	2.90	148.089 147.517	148.089 147.590	148.152		148.178	149.204	1/Q
10 100	R74/Q	R74/Q to 5/J	RW70/Q;RW71/Q;RW72/Q;RW74/Q	ALLOT		5.00 5.00	216 329		0.91 1.00	0.069	0.063 0.069	0.063 0.069	38 63	38 FLOW WIDTH 0.119	3.72	63 (0.000	53S.15 3 month)	38	0	1A/5J	5.00 5.00	216 329	0.346 0.381	348			215 (Pipe flow set by user)	10.074	10.83	450(2)	1.35	0.12		Qg 0.039 Qo 0.215 Do 450 CHART 34 Angle 28 Case3 S/Do 2.5 Du/Do 0.83 Qg/Qo 0.18 K 0.49 S/Do 1.16 cor 0.29 Ku 0.78 Kw 0.78	0.093	0.78	0.073			0.78	0.073	0.57	0.057	0.147	4.78	147.517 146.426	147.517 146.821	147.590		147.590	148.879	R74/Q
10 100	1/J	1/J to 2/J	1/J	ROAD/ALLOT		10.00 10.00	168 254		0.88 1.00	0.193	0.170 0.193	0.170 0.193	79 136	79 FLOW WIDTH 1.410	4.92	710 (0.000	1 3 month)	63	16	1A/3J	10.00 10.00	168 254	0.170 0.193	136			63 (Pipe flow= Grate flow)	9.137	0.45	375(2)	0.57	0.15		Qg 0.063 Qo 0.063 Do 375 CHRT 32: Vo2/2gDo 0.04 H/Do 0.06 Kg side flow 9.29 end flow 6.70	0.017	9.29	0.154			9.29	0.154	0.13	0.012			152.309 152.268	152.332 152.320	152.486		152.486	153.429	1/J
10 100	2/J	2/J to 3/J	1/J;2/J	ROAD/VERGE		5.00 5.00	216 329		0.88 1.00	0.055	0.048 0.055	0.048 0.055	29 50	29 FLOW WIDTH 0.812	4.92	710 (0.000	1 3 month)	29	0	3/J	10.15 10.15	167 253	0.218 0.248	174			85 (Pipe flow= Sum upstr atten flows)	57.753	3.93	375(2)	0.77	0.96		Qg 0.022 Qo 0.085 Do 375 Angle 80 Chart 47 S/Do 2.5 chartdeg Du/Do 1.00 K0 1.92 K0.5 2.12 Qu/Qo 0.74 Cg 0.61 K 2.04 S/Do 2.0 K0 2.44 K0.5 2.40 K 2.41 S/Do 1.5 K0 2.67 K0.5 2.58 K 2.62	0.030	2.37	0.072		Interp val for S/Do 1.22 Kw 2.73 CHART 46 S/Do 2.0 K0 2.04 K0.5 1.92 K 1.97 S/Do 1.5 K0 2.09 K0.5 2.31 K 2.22 Interp val for S/Do 1.22 Ku 2.37			2.73	0.083	0.24	0.136	0.127	2.60	152.248 149.981	152.248 149.733	152.320		152.331	153.308	2/J
10 100	3/J	3/J to 4/J	R61/3J;R62/3J;R63/3J;R64/3J;R2/R;R1/R;R65A/3J;R65B/3J;1A/3J;1/J;2/J;3/J	ROAD/VERGE		5.00 5.00	216 329		0.88 1.00	0.044	0.038 0.044	0.038 0.044	23 40	23 FLOW WIDTH 0.702	4.92	710 (0.000	1 3 month)	23	0	1A/6J	11.11 11.11	161 244	1.035 1.154	782			363 (Pipe flow= Sum upstr atten flows)	15.008	1.00	600(2)	1.24	0.20		Qg 0.017 Qo 0.363 Do 600 Flow 2/J made eqv grate flow CHART 37 Angle 42 Case3 S/Do 2.5	0.078	1.68	0.132		Du/Do 0.88 Qg/Qo 0.27 K 1.27 S/Do 1.22 cor 0.41 Ku 1.68 Kw 1.68 K vals above for stepped pipes as grate flow	1.68	0.132	0.32	0.048	0.329	2.26	149.270 149.120	149.270 149.185	149.402		149.402	151.086	3/J
10 100	1/P	1/P to 2/P	1/P	ROAD/ALLOT		10.00 10.00	168 254		0.88 1.00	0.459	0.404 0.459	0.404 0.459	189 324	222 FLOW WIDTH 3.016	0.31	282 (0.000	13S.111 3 month)	222	0		10.00 10.00	168 254	0.404 0.459	324			222 (Pipe flow= Grate flow)	8.840	0.50	450(2)	1.40	0.11		Qg 0.222 Qo 0.222 Do 450 CHRT 32: Vo2/2gDo 0.22 H/Do 0.59 Kg side flow 4.61 end flow 3.80	0.100	4.61	0.460			4.61	0.460	0.61	0.054			149.176 149.132	149.440 149.386	149.900		149.900	150.095	1/P
10 100	2/P	2/P to 4/J	1/P;2/P	ROAD/ALLOT		10.00 10.00	168 254		0.88 1.00	0.074	0.065 0.074	0.065 0.074	30 52	30 FLOW WIDTH 0.000	0.00	282 (0.000	13S.111 3 month)	30	0		10.11 10.11	167 253	0.469 0.533	375			251 (Pipe flow= Sum upstr atten flows)	20.290	1.64	525(2)	1.12	0.30		Qg 0.030 Qo 0.251 Do 525 Angle 83 Chart 47 S/Do 2.5 chartdeg Du/Do 0.86 K0 2.03 K0.5 2.28 Qu/Qo 0.88 Cg 0.30 K 2.11 S/Do 2.0 K0 2.47 K0.5 2.40 K 2.45 S/Do 1.5 K0 2.70 K0.5 2.68 K 2.69	0.064	2.15	0.138		Interp val for S/Do 1.54 Kw 2.67 CHART 46 S/Do 2.0 K0 1.98 K0.5 2.02 K 1.99 S/Do 1.5 K0 2.09 K0.5 2.31 K 2.16 Interp val for S/Do 1.54 Ku 2.15	2.67	0.171	0.31	0.063			149.132 148.800	149.248 149.185	149.386		149.419	150.098	2/P
10 100	4/J	4/J to 5/J	R61/3J;R62/3J;R63/3J;R64/3J;R2/R;R1/R;R65A/3J;R65B/3J;1A/3J;1/J;2/J;3/J;1/P;2/P	MH													41				11.31 11.31	160 242	1.504 1.687	1134	1235 (Pipe flow= Sum upstr atten flows)	533	601	53.354	4.45	600(2)	2.06	0.43		Qo 0.601 Do 600 Flow 3/J made eqv grate flow Angle 91 Chart 47 S/Do 2.5 chartdeg Du/Do 0.88 K0 2.01 K0.5 2.27 Qu/Qo 0.40 Cg 1.12 K 2.30 S/Do 2.0 K0 2.47 K0.5 2.40 K 2.39 S/Do 1.5 K0 2.69 K0.5 2.67 K 2.66 Interp val for S/Do 1.87 Kw 2.46 CHART 46 S/Do 2.0 K0 2.00 K0.5 2.01 K 2.01 S/Do 1.5 K0 2.09 K0.5 2.31 K 2.33 Interp val for S/Do 1.87 Ku 2.09 K vals above for stepped pipes as grate flow grate flow decreased by 0.361 from 3/J Routine 2.14 Equiv defin -1 CHART 49 High vel lat 3/J Dhv 600 Qhv 0.361 Dhv/Dlv 1.1 Dhv/Do 1.00	0.216	1.78	0.385		Qhv/Qo 0.60 H 2.19 Low vel latrl 2/P Dlv 525 Qlv 0.240 Dlv/Do 0.88 Qlv/Qo 0.40 L 0.30 H-L 1.89 No grate flow: H-L-0.2 = 1.69 Ku=Kw= 1.69 Combined pipes in line case Join Pipes: 2/P and 3/J Vel1 1.276 Vel2 1.110 Eq Dia 795 Angle 162 Flow 0.601 CHART 50 Du/Do1.33 alpha 0 K'w 0.05 Vu 1.21 WSE 0.20 Ku 0.92 Kw 0.94 Interpolated Ku= 1.70 Kw= 1.70 K vals step pipes as pipe flow Ku 1.70 Kw 1.70 Averaged Ku 1.78 Kw 1.85	1.85	0.401	0.88	0.469	0.285	4.49	148.800 146.426	148.800 146.821	149.185		149.201	150.438	4/J
10 100	1A/6J	1A/6J to 6/J	1A/6J	ROAD/ALLOT		10.00 10.00	168 254		0.88 1.00	0.131	0.115 0.131	0.115 0.131	54 92	54 FLOW WIDTH 0.785	19.27	1405 (0.000	1 3 month)	40	14	1A/4L	10.00 10.00	168 254	0.115 0.131	92			40 (Pipe flow= Grate flow)	11.800	3.38	375(2)	0.36	0.20		Qg 0.040 Qo 0.040 Do 375 CHRT 32: Vo2/2gDo 0.02 H/Do 0.00 Kg side flow 10.34 end flow 7.30 Part full downstream pipe	0.007	1.00	0.199		Upstream HGL 146.239 below outlet pipe obv 146.326 Set Kp to 1	1.00	0.199	0.05	0.006	0.089	1.98	146.326 145.927	146.040 145.641	146.239		146.239	147.360	1A/6J
10 100	6/J	6/J to 7/J	RW87/K;RW86/K;RW85/K;RW84/K;RW83/K;RW82/K;RW81/K;RW79/K;RW70/Q;RW71/Q;RW72/Q;RW74/Q;R61/3J;R62/3J;R63/3J;R64/3J;R2/R;R1/R;R65A/3J;R65B/3J;1A/3J;1/J;2/J;3/J;1/P;2/P;1A/5J;1/L;2/L;1A/3L;3/L;1A/4L;1B/4L;1A/6J	MH													46				11.99 11.99	156 237	4.135 4.648	3060	1620 (Pipe flow= Sum upstr atten flows)	1330	1730	21.650	0.40	1050(2)	1.94	0.19		Qo 1.730 Do 1050 Flow 1A/6J made eqv grate flow Routine 2.11 CHART 49 High vel lat 5/J Dhv 675 Qhv 0.963 Dhv/Dlv 1.1 Dhv/Do 0.64 Qhv/Do 0.56 H 3.86 Low vel latrl 4/L Dlv 600 Qlv 0.730 Dlv/Do 0.57 Qlv/Qo 0.42 L 1.79 H-L 2.07	0.192	1.09	0.209		Ku=Kw= 2.07 CHART 48 Du/Do 0.57 Qu/Qo 0.42 K 0.91 d/Do 2.0 chrt Qg/Qo 0.02 Kg 0.01 d/Do 1.5 chrt Qg/Qo 0.02 Kg 0.01 d/Do 1.00 Interp value Kg 0.01 Ku=Kw= 0.92 Interpolated Ku= 1.09 Kw= 1.09 K vals above for stepped pipes as grate flow	1.09	0.209	0.37	0.080	0.840	2.29	145.313 145.226	145.313 145.016	145.522		145.522	146.984	6/J

DIAL BEFORE YOU DIG
www.1100.com.au
The Essential First Step

NORTH:

SCALE:
THIS SCALE SHOWN IS ORIGINAL DRAWING SCALE
A1
DO NOT SCALE FROM THIS DRAWING - USE ONLY DIMENSIONS PROVIDED - IF IN DOUBT PLEASE ENQUIRE

APPROVED
FOR AND ON BEHALF OF JFP URBAN CONSULTANTS PTY LTD
☐ T.M.KINNEY RPEQ 5087 ☐ A.FRASER RPEQ 5691 ☐ J.PAPPAS RPEQ 6086
☐ S.MARSH RPEQ 8068 ☑ H.WATSON RPEQ 6200

DESIGNED	CDV
DRAWN	WN
CHECKED	PNH
DATUM: AHD	

ISSUE:

ISSUE:	DETAILS:	DATE:	INIT:
A	ISSUE FOR OPERATIONAL WORKS APPROVAL	23/08/22	CDV

TITLE:
DRAINAGE CALCULATIONS TABLE SHEET 2 OF 3
DFC (PROJECT MANAGEMENT) PTY LTD
'ARCHERS WAY' ESTATE - STAGE 4
AT 22-80 CASH STREET, D'AGUILAR

DETAILS:
JOB NO: M2584E_4
PLAN: D09
ISSUE: A
MORETON BAY REGIONAL COUNCIL REF: DA/38032/2019/V3VR
FILE NAME: DRAINAGE SECTIONS.DWG

JFP URBAN CONSULTANTS
BRISBANE - SUNSHINE COAST - CENTRAL QLD
BRISBANE
JFP House - 76 Ernest Street,
South Brisbane Qld 4101
P 07 3012 0100 W www.jfp.com.au
JFP URBAN CONSULTANTS PTY. LTD. A.C.N. 050 414 045
PLANNERS
URBAN DESIGNERS
SURVEYORS
ENGINEERS
LANDSCAPE ARCHITECTS

DENNIS FAMILY CORPORATION

COPYRIGHT © 2011 JFP URBAN CONSULTANTS PTY LTD THIS DOCUMENT MAY NOT BE COPIED OR TRANSMITTED IN ANY FORM OR BY ANY MEANS IN PART OR IN WHOLE WITHOUT THE WRITTEN PERMISSION OF JFP URBAN CONSULTANTS PTY LTD.

Document Set ID: 6698357
Version: 1, Version Date: 09/05/2023
Moreton Bay Regional Council
Approved subject to conditions of Decision Notice DA/2023/0531
09/05/2023

LOCATION					TIME			SUB-CATCHMENT RUNOFF							INLET DESIGN							DRAIN DESIGN															HEADLOSSES										PART FULL		DESIGN LEVELS						
						tc	I	C10	C	A	C×A	+CA	Q					Qg	Qb		tc	I	+CA	Qt	Qm	Qs	Qp	L	S		V	T			V2/2g	Ku	hu	Kl	hl	Kw	hw	Sf	hf		Vp							
DESIGN ARI	STRUCTURE No.	DRAIN SECTION	SUB-CATCHMENTS CONTRIBUTING	LAND USE	SLOPE OF CATCHMENT	SUB-CATCHMENT TIME OF CONC.	RAINFALL INTENSITY	10yr RUNOFF CO-EFFICIENT	CO-EFFICIENT OF RUNOFF	SUB-CATCHMENT AREA	EQUIVALENT AREA	SUM OF (C × A)	SUB-CATCHMENT DISCHARGE	FLOW IN K&C (INC. BYPASS)	ROAD GRADE AT INLET	MINOR FLOW ROAD CAPACITY	INLET TYPE	FLOW INTO INLET	BYPASS FLOW	BYPASS STRUCTURE No.	CRITICAL TIME OF CONC.	RAINFALL INTENSITY	TOTAL (C × A)	MAJOR TOTAL FLOW	MAJOR SURFACE FLOW CAPACITY	MAJOR SURFACE FLOW	PIPE FLOW	REACH LENGTH	PIPE GRADE	PIPE / BOX DIMENSIONS (CLASS)	FLOW VELOCITY	TIME OF FLOW IN REACH	STRUCTURE CHART No.	STRUCTURE RATIOS FOR 'K' VALUE CALCULATIONS	VELOCITY HEAD	U/S HEADLOSS COEFFICIENT	U/S PIPE STRUCT. HEADLOSS	LAT. HEADLOSS CO-EFFICIENT	LAT. PIPE STRUCT. HEADLOSS	W.S.E CO-EFFICIENT	CHANGE IN W.S.E	PIPE FRICTION SLOPE	PIPE FRICTION HEADLOSS (L × Sf)	DEPTH	VELOCITY	OBVERT LEVELS	DRAIN SECTION H.G.L	UPSTREAM H.G.L	LAT. H.G.L	W.S.E.	SURFACE OR K&C INVERT LEVEL	STRUCTURE No.
yrs					%	min	mm/h			ha	ha	ha	l/s	l/s	%	l/s		l/s	l/s		min	mm/h	ha	l/s	l/s	l/s	l/s	m	%	mm	m/s	min			m		m		m		m		%	m	m	m/s	m	m	m	m	m	m	
10 100	3/L	3/L to 4/L	1/L;2/L;1A/3L ;3/L	ROAD/ALLOT		10.00 10.00	168 254		0.88 1.00	0.250	0.220 0.250	0.220 0.250	103 177	116 FLOW WIDTH 2.423	1.00	301 (0.000	4 3 month)	90	27	1B/4L	10.75 10.75	163 247	0.931 1.058	726	(Pipe flow= Sum upstr		362 atten flows)	96.558	2.60	450(2)	2.28	0.71		Qg 0.087 Qo 0.362 Do 450 Flow 2/L made eqv grate flow Angle 94 Chart 47 S/Do 2.5 chartdeg Du/Do 0.83 K0 2.07 K0.5 2.30 Qu/Qo 0.30 Cg 1.21 K 2.34 S/Do 2.5 K0 2.07 K0.5 2.30 K 2.34 S/Do 2.0 K0 2.48 K0.5 2.40 K 2.38 Interp val for S/Do 2.39 Kw 2.35 CHART 46 S/Do 2.5 K0 1.67 K0.5 2.01 K 2.08 S/Do 2.0 K0 1.97 K0.5 2.02 K 2.03 Interp val for S/Do 2.39 Ku 2.07 K vals above for stepped pipes as grate flow grate flow decreased by 0.167 from 2/L Routine 2.2 CHART 48 Du/Do 0.83 Qu/Qo 0.46 K 1.38	0.265	1.92	0.509		d/Do 2.0 d/Do 1.5 d/Do 1.00 Ku=Kw= 1.82 Combined pipes in line case Join Pipes: 1A/3L and 2/L Vel1 1.515 Vel2 0.974 Eq Dia 518 Angle 218 Flow 0.275 CHART 33 Angle 0 S/Do 2.5 Du/Do 1.15 Qg/Qo 0.24 K 0.92 S/Do 1.67 cor 0.21 Ku 1.13 Kw 1.13 Interpolated Ku= 1.85 Kw= 1.85 K vals step pipes as pipe flow Ku 1.85 Kw 1.85 Averaged Ku 1.92 Kw 2.01	chrt Qg/Qo 0.24 Kg 0.32 chrt Qg/Qo 0.24 Kg 0.38 Interp value Kg 0.44	2.01	0.532	1.61	1.558	0.301	3.20	148.046 145.536	148.046 146.048	148.555		148.578	149.838	3/L
10 100	1A/4L	1A/4L to 4/L	1A/4L	ROAD/ALLOT		10.00 10.00	168 254		0.88 1.00	0.442	0.389 0.442	0.389 0.442	182 312	230 FLOW WIDTH 3.086	0.00	282 (0.000	13S.111 3 month)	230	0		10.00 10.00	168 254	0.389 0.442	312	(Pipe flow= Grate flow)		230	4.344	0.50	525(2)	1.03	0.07		Qg 0.230 Qo 0.230 Do 525 CHRT 32: Vo2/2gDo 0.10 H/Do 1.03 Kg side flow 4.89 end flow 3.88	0.054	4.89	0.265			4.89	0.265	0.26	0.011			145.511 145.489	146.059 146.048	146.324		146.324	146.506	1A/4L
10 100	1A/5J	1A/5J to 5/J	1A/5J	ROAD/VERGE		10.00 10.00	168 254		0.88 1.00	0.106	0.093 0.106	0.093 0.106	43 75	43 FLOW WIDTH 0.963	3.90	594 (0.000	4 3 month)	41	2	1B/7M	10.00 10.00	168 254	0.093 0.106	75	(Pipe flow= Grate flow)		41	1.773	5.00	375(2)	0.37	0.03		Qg 0.041 Qo 0.041 Do 375 CHRT 32: Vo2/2gDo 0.02 H/Do 0.00 Kg side flow 10.31 end flow 7.28 Part full downstream pipe	0.007	1.00	0.270		Upstream HGL 147.458 below outlet pipe obv 147.481 Set Kp to 1	1.00	0.270	0.06	0.001	0.082	2.30	147.481 147.392	147.188 147.099	147.458		147.458	148.506	1A/5J
10 100	5/J	5/J to 6/J	RW87/K;RW8 6/K;RW85/K; RW84/K;RW8 3/K;RW82/K; RW81/K;RW79 /K;RW70/Q;R W71/Q;RW72/ Q;RW74/Q;R6 1/3J;R62/3J;R 63/3J;R64/3J ;R2/R;R1/R;R 65A/3J;R65B /3J;1A/3J;1/J; 2/J;3/J;1/P;2 /P;1A/5J	MH													42				11.74 11.74	157 239	2.366 2.638	1751	1188 (Pipe flow= Sum upstr	782	969 atten flows)	38.710	2.88	675(2)	2.63	0.25		Qo 0.969 Do 675 Flow RW79/K made eqv grate flow Flow 1A/5J made eqv grate flow Routine 2.24 Join Pipes: R74/Q and 4/J Vel1 0.983 Vel2 2.086	0.353	1.12	0.395		Eq Dia 715 Angle 174 Flow 0.746 CHART 33 Angle 6 S/Do 2.5 Du/Do 1.06 Qg/Qo 0.23 K 0.89 S/Do 1.58 cor 0.23 Ku 1.12 Kw 1.12 K vals above for stepped pipes as grate flow	1.12	0.395	1.23	0.476	0.404	4.29	146.426 145.313	146.426 145.522	146.821		146.821	148.434	5/J
10 100	6/M	6/M to 7/M	1/M;2/M;1A/3 M;3/M;4/M;5/ M;5A/M;1/N;2 /N	MH													45				11.99 11.99	156 237	1.901 2.162	1423	1141 (Pipe flow= Sum upstr	644	780 atten flows)	16.741	0.40	900(2)	1.19	0.23		Qo 0.780 Do 900 Routine 2.10 CHART 49 High vel lat 5A/M Dhv 600 Qhv 0.595 Dhv/Dlv 1.0 Dhv/Do 0.67 Qhv/Qo 0.76 H 4.89 Low vel latrl 2/N Dlv 600 Qlv 0.184 Dlv/Do 0.67 Qlv/Qo 0.24 L 0.32 H-L 4.57	0.072	1.00	0.101		No grate flow: H-L-0.2 = 4.37 Ku=Kw= 4.37 CHART 53 Du/Do 0.7 Qu/Qo 0.76 Kw=Ku= -0.61 Interpolated Ku= 1.77 Kw= 1.77 Part full downstream pipe Upstream HGL 145.253 below outlet pipe obv 145.348 Set Kp to 1	1.00	0.101	0.17	0.028	0.538	1.94	145.348 145.281	145.153 145.124	145.253		145.253	146.074	6/M

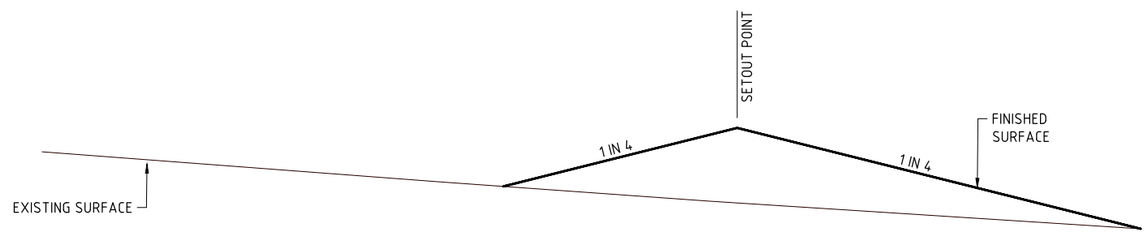

TYPICAL TABLE DRAIN SECTION - LOT 66
SCALE 1:20

B

DIAL BEFORE YOU DIG www.1100.com.au
The Essential First Step

NORTH:

SCALE: THIS SCALE SHOWN IS ORIGINAL DRAWING SCALE
A1
DO NOT SCALE FROM THIS DRAWING - USE ONLY DIMENSIONS PROVIDED - IF IN DOUBT PLEASE ENQUIRE

APPROVED
FOR AND ON BEHALF OF JFP URBAN CONSULTANTS PTY LTD
T.McKINNEY RPEQ 5087 | A.FRASER RPEQ 5691 | J.PAPPAS RPEQ 6086 | S.MARSH RPEQ 8068 | H.WATSON RPEQ 6200

DESIGNED	CDV
DRAWN	WN
CHECKED	PNH
DATUM: AHD	

ISSUE:

ISSUE:	DETAILS:	DATE:	INIT:
B	INFORMATION REQUEST AMENDMENTS	03/04/23	CDV
A	ISSUE FOR OPERATIONAL WORKS APPROVAL	23/08/22	CDV

TITLE:
DRAINAGE CALCULATIONS TABLE
SHEET 3 OF 3
DFC (PROJECT MANAGEMENT) PTY LTD
'ARCHERS WAY' ESTATE - STAGE 4
AT 22-80 CASH STREET, D'AGUILAR

DENNIS FAMILY CORPORATION

DETAILS:
JOB NO: M2584E_4
PLAN: D10
ISSUE: B
MORETON BAY REGIONAL COUNCIL REF: DA/38032/2019/V3VR
FILE NAME: DRAINAGE SECTIONS.DWG

URBAN CONSULTANTS
BRISBANE - SUNSHINE COAST - CENTRAL QLD
BRISBANE
JFP House - 76 Ernest Street,
South Brisbane Qld 4101
P 07 3012 0100 W www.jfp.com.au
JFP URBAN CONSULTANTS PTY. LTD. A.C.N. 050 414 045
PLANNERS
URBAN DESIGNERS
SURVEYORS
ENGINEERS
LANDSCAPE ARCHITECTS

COPYRIGHT © 2011 JFP URBAN CONSULTANTS PTY LTD THIS DOCUMENT MAY NOT BE COPIED OR TRANSMITTED IN ANY FORM OR BY ANY MEANS IN PART OR IN WHOLE WITHOUT THE PERMISSION OF JFP URBAN CONSULTANTS PTY LTD.

Document Set ID: 66908359
Version: 1, Version Date: 09/05/2023
Moreton Bay Regional Council
Approved subject to conditions of Decision Notice DA/2023/0531
09/05/2023

CONSTRUCTION EQUIPMENT	PIPE CLASS	MINIMUM COMPACTION COVER TO PIPE OBVERT								
		Ø375	Ø450	Ø525	Ø600	Ø675	Ø750	Ø825	Ø900	Ø1050
VIBRATORY RAMMER (UP TO 75kg)	2	0.450	0.400	0.400	0.350	0.350	0.300	0.300	0.250	0.25
	3	0.300	0.300	0.300	0.250	0.250	0.200	0.200	0.200	0.200
VIBRATORY TRENCH ROLLER (UP TO 2t)	2	0.400	0.400	0.350	0.250	0.250	0.200	0.200	0.200	0.200
	3	0.250	0.200	0.200	0.200	0.200	0.200	0.200	0.200	0.200
VIBRATORY SMOOTH DRUM ROLLER (7t)	2	0.700	0.700	0.650	0.650	0.650	0.600	0.600	0.400	0.400
	3	0.450	0.450	0.450	0.350	0.350	0.200	0.200	0.200	0.200
VIBRATORY SMOOTH DRUM ROLLER (10t)	2	0.850	0.850	0.800	0.800	0.800	0.750	0.750	0.750	0.750
	3	0.550	0.550	0.500	0.500	0.500	0.200	0.200	0.200	0.200
EXCAVATOR AND COMPACTION WHEEL (15t)	2	0.700	0.650	0.650	0.650	0.650	0.600	0.600	0.550	0.550
	3	0.450	0.450	0.450	0.450	0.450	0.350	0.350	0.250	0.250
EXCAVATOR AND COMPACTION WHEEL (25t)	2	1.050	1.000	0.950	0.900	0.900	0.850	0.850	0.750	0.750
	3	0.650	0.650	0.650	0.650	0.650	0.600	0.600	0.500	0.500
GRADER [CAT120H] 14.5t)	2	0.600	0.600	0.450	0.200	0.200	0.200	0.200	0.200	0.200
	3	0.600	0.450	0.450	0.200	0.200	0.200	0.200	0.200	0.200
GRADER [CAT140H] (17.0t)	2	0.600	0.600	0.600	0.200	0.200	0.200	0.200	0.200	0.200
	3	0.600	0.200	0.200	0.200	0.200	0.200	0.200	0.200	0.200
SCRAPER [CAT613C11] (27.2t)	2	0.600	0.600	0.600	0.600	0.600	0.600	0.600	0.200	0.200
	3	0.600	0.600	0.600	0.600	0.600	0.200	0.200	0.200	0.200
SCRAPER [CAT621F] (53.8t)	2	0.700	0.650	0.650	0.650	0.600	0.600	0.600	0.600	0.600
	3	0.650	0.600	0.600	0.650	0.600	0.600	0.600	0.600	0.600
DOZER [CATD7 G]	2	0.600	0.600	0.600	0.200	0.200	0.200	0.200	0.200	0.200
	3	0.200	0.200	0.200	0.200	0.200	0.200	0.200	0.200	0.200
DOZER [CATD9 R]	2	0.600	0.600	0.600	0.600	0.600	0.600	0.600	0.600	0.200
	3	0.600	0.600	0.600	0.600	0.600	0.200	0.200	0.200	0.200
EXCAVATOR [CAT315B] (15.8t)	2	0.200	0.200	0.200	0.200	0.200	0.200	0.200	0.200	0.200
	3	0.200	0.200	0.200	0.200	0.200	0.200	0.200	0.200	0.200
EXCAVATOR [CAT317] (17.3t)	2	0.200	0.200	0.200	0.200	0.200	0.200	0.200	0.200	0.200
	3	0.200	0.200	0.200	0.200	0.200	0.200	0.200	0.200	0.200
EXCAVATOR [CAT325B] (25.9t)	2	0.200	0.200	0.200	0.200	0.200	0.200	0.200	0.200	0.200
	3	0.200	0.200	0.200	0.200	0.200	0.200	0.200	0.200	0.200

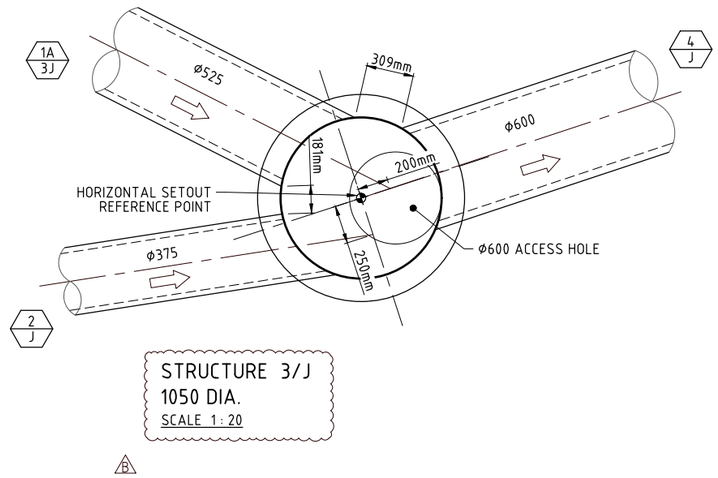

STRUCTURE 3/J
1050 DIA.
SCALE 1 : 20

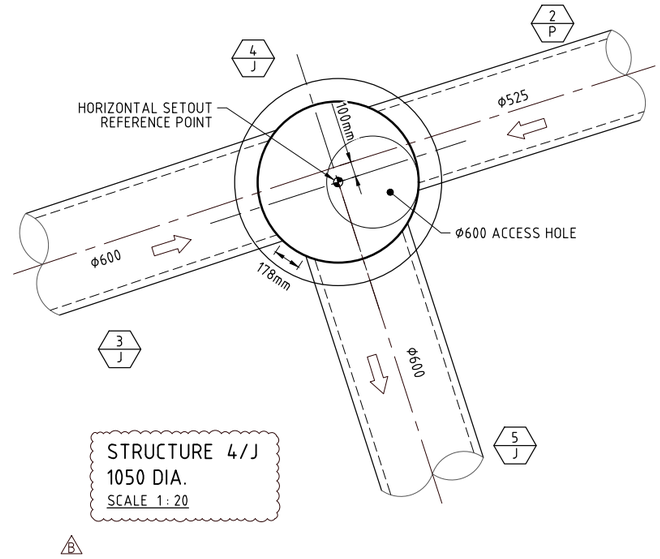

STRUCTURE 4/J
1050 DIA.
SCALE 1 : 20

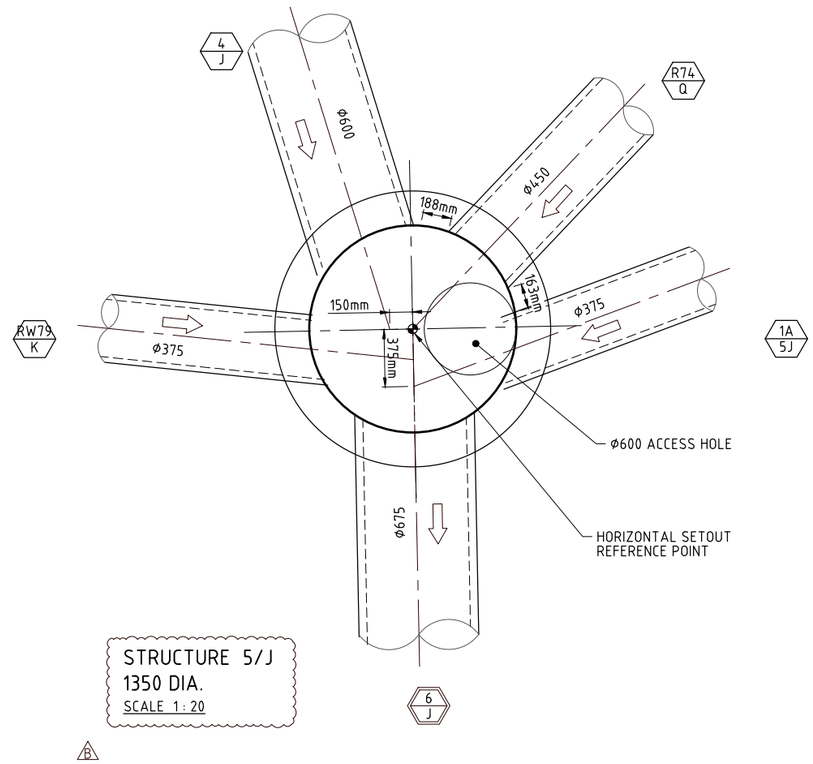

STRUCTURE 5/J
1350 DIA.
SCALE 1 : 20

TYPE HS2 SUPPORT:

1. THE HAUNCH ZONE GOES FROM THE BASE OF THE PIPE TO A HEIGHT OF 0.3m TIMES THE DIAMETER OF THE PIPE (ie TO 3/10 OF THE DIAMETER OF THE PIPE).
2. THE HAUNCH ZONE IS COMPACTED TO A MINIMUM DRY DENSITY RATIO OF 90%. (DI=60)
3. THE SIDE ZONE GOES FROM THE TOP OF THE HAUNCH ZONE TO A HEIGHT OF 0.7 TIMES THE DIAMETER OF THE PIPE (ie TO 7/10 OF THE DIAMETER OF THE PIPE).
4. THE SIDE ZONE IS COMPACTED TO A MINIMUM DRY DENSITY RATIO OF 90%. (DI=60)
5. THERE IS A 300mm OVERLAY ZONE OF COMPACTED ORDINARY FILL.

NOTES:

1. SOIL TYPE USED FOR THIS TABLE IS CLAYEY SAND. ALL OTHER SOIL TYPES MUST BE REFERRED IMMEDIATELY TO THE SUPERVISING ENGINEER SO MINIMUM COVERS CAN BE CALCULATED.
2. INSTALLATION TYPE FOR THIS TABLE IS HS2. (REFER DETAIL)
3. ANY CONSTRUCTION EQUIPMENT, INSTALLATION TYPE, PIPE CLASS OR PIPE DIAMETER NOT COVERED IN THIS TABLE SHOULD BE REFERRED ONTO THE SUPERVISING ENGINEER BEFORE ANY CONSTRUCTION COMMENCES
4. DISTANCES SHOWN ARE THE ABSOLUTE MINIMUM COMPACTION COVER TO THE OBVERT OF THE STORMWATER PIPE FOR THE NOMINATED MACHINERY. THE CONTRACTOR IS TO ENSURE THAT MACHINES THAT REQUIRE HIGHER COMPACTION COVER ARE KEPT CLEAR OF STORMWATER PIPES AND TRENCHES UNTIL THEIR NECESSARY COMPACTION COVER IS ACHIEVED.
5. CONSTRUCTION EQUIPMENT LISTED IN THIS TABLE ARE EXAMPLES ONLY AND EQUIVALENT MACHINERY MAY BE USED.

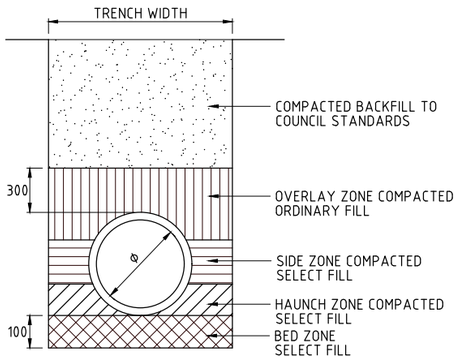

INSTALLATION TYPE HS2

NOTE:
CRACKED PIPES WILL NOT BE ACCEPTED AT 'ON MAINTENANCE' AND IT IS TO BE DEMONSTRATED IN ACCORDANCE WITH COUNCIL STANDARDS THAT THE STORMWATER SYSTEM IS ACCEPTABLE TO COUNCIL WITH REGARD TO CRACKED PIPES. (THE CONTRACTOR IS TO REFER TO SECTION 6.5.1 OF THE SUBDIVISION AND DEVELOPMENT GUIDELINES FOR FURTHER INFORMATION.)

DIAL BEFORE YOU DIG www.1100.com.au The Essential First Step

URBAN CONSULTANTS
JFP
BRISBANE - SUNSHINE COAST - CENTRAL QLD
BRISBANE
JFP House - 76 Ernest Street,
South Brisbane Qld 4101
P 07 3012 0100 W www.jfp.com.au
JFP URBAN CONSULTANTS PTY. LTD. A.C.N. 050 414 045
PLANNERS
URBAN DESIGNERS
SURVEYORS
ENGINEERS
LANDSCAPE ARCHITECTS

NORTH: N

SCALE: 1:20 A1
THIS SCALE SHOWN IS ORIGINAL DRAWING SCALE
0 0.2 0.4 0.6 0.8 1 (A1) 1:20 2 Metres
(A3) 1:40
DO NOT SCALE FROM THIS DRAWING - USE ONLY DIMENSIONS PROVIDED - IF IN DOUBT PLEASE ENQUIRE

APPROVED
FOR AND ON BEHALF OF JFP URBAN CONSULTANTS PTY LTD
T.McKINNEY RPEQ 5087
A.FRASER RPEQ 5691
J.PAPPAS RPEQ 6086
S.MARSH RPEQ 8068
H.WATSON RPEQ 6200

DESIGNED	CDV
DRAWN	WN
CHECKED	PNH
DATUM: AHD	

ISSUE:	DETAILS:	DATE:	INIT:
B	INFORMATION REQUEST AMENDMENTS	03/04/23	CDV
A	ISSUE FOR OPERATIONAL WORKS APPROVAL	23/08/22	CDV

TITLE:
DRAINAGE STRUCTURE DETAILS

DFC (PROJECT MANAGEMENT) PTY LTD

'ARCHERS WAY' ESTATE - STAGE 4
AT 22-80 CASH STREET, D'AGUILAR

DENNIS FAMILY CORPORATION

DETAILS:
JOB NO: M2584E_4
PLAN: D11 ISSUE: B
MORETON BAY REGIONAL COUNCIL REF: DA/38032/2019/V3VR
FILE NAME: DRAINAGE DETAILS.DWG

COPYRIGHT © 2011 JFP URBAN CONSULTANTS PTY LTD THIS DOCUMENT MAY NOT BE COPIED OR TRANSMITTED IN ANY FORM OR BY ANY MEANS IN PART OR IN WHOLE WITHOUT THE PERMISSION OF JFP URBAN CONSULTANTS PTY LTD.

Document Set ID: 66908357
Version: 1, Version Date: 09/05/2023
Moreton Bay Regional Council
Approved subject to conditions of Decision Notice DA/2023/0531
09/05/2023

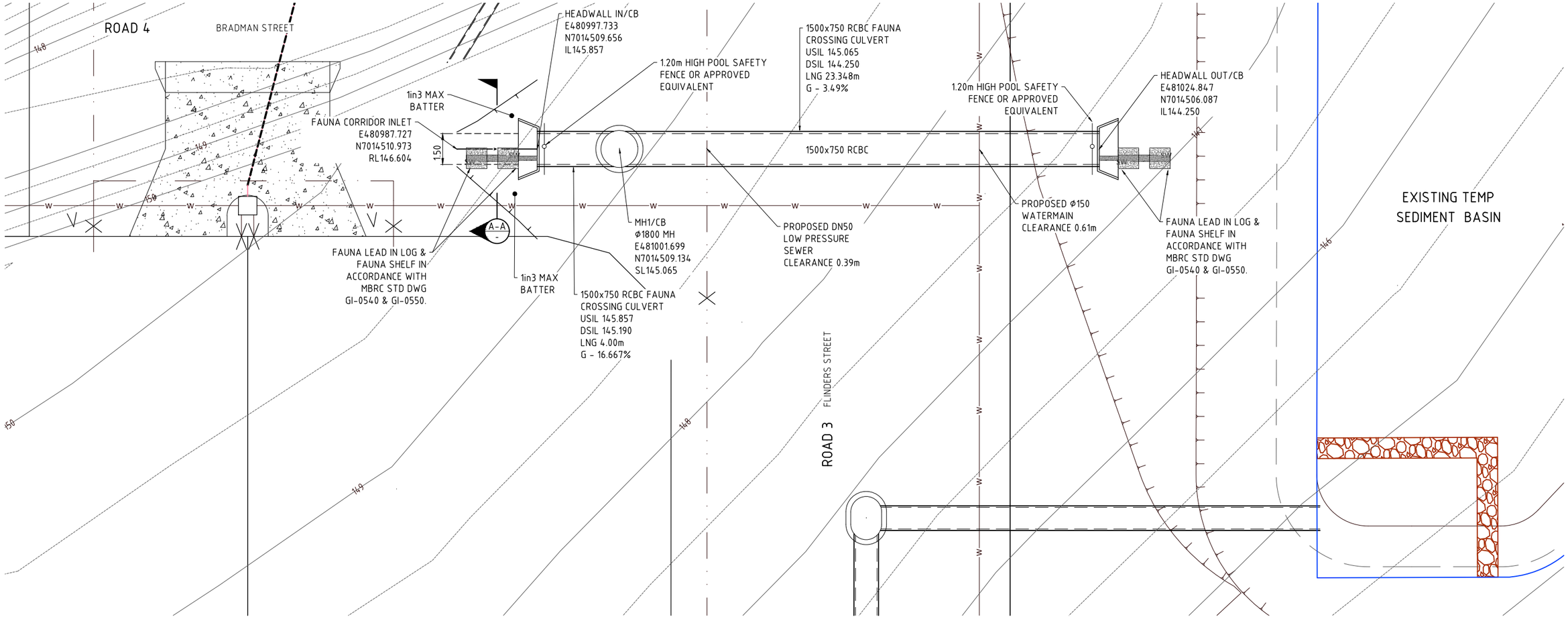

FAUNA CROSSING CULVERT - PLAN

SCALE 1:100

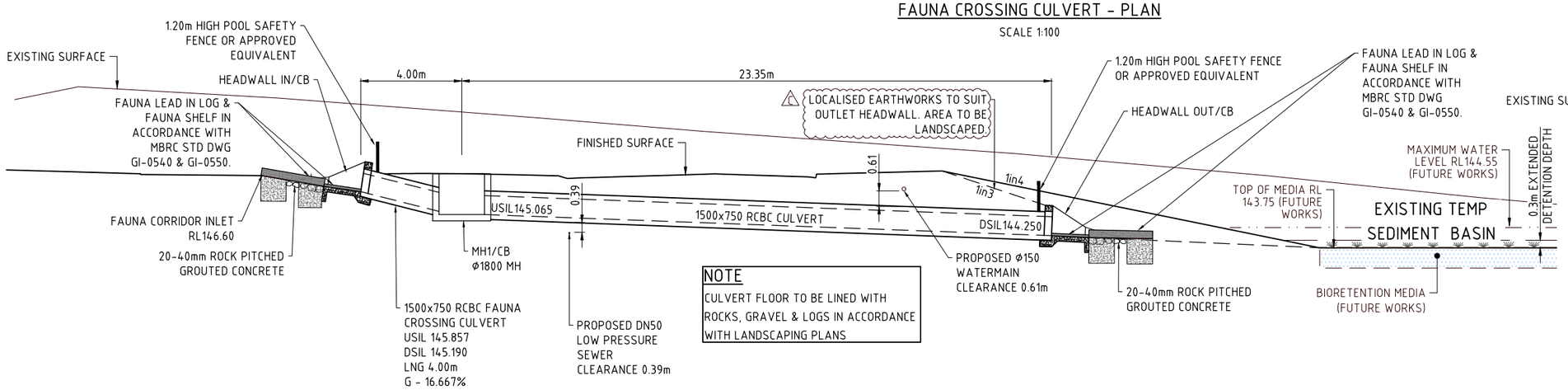

NOTE
CULVERT FLOOR TO BE LINED WITH ROCKS, GRAVEL & LOGS IN ACCORDANCE WITH LANDSCAPING PLANS

FAUNA CROSSING CULVERT - SECTION

SCALE 1:100

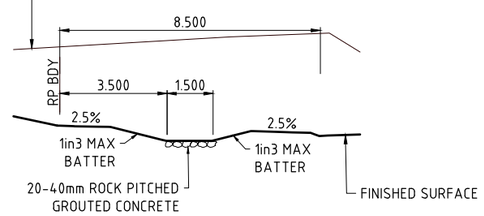

TYPICAL SECTION A-A

SCALE 1:100

DIAL BEFORE YOU DIG www.1100.com.au The Essential First Step

NORTH:	SCALE:	ISSUE:	TITLE:	DETAILS:
N	1:100 A1 — THIS SCALE SHOWN IS ORIGINAL DRAWING SCALE 0 1 2 3 4 5 (A1) 1:100 10 Metres (A3) 1:200 — DO NOT SCALE FROM THIS DRAWING - USE ONLY DIMENSIONS PROVIDED - IF IN DOUBT PLEASE ENQUIRE	C MINOR AMENDMENTS 14/04/23 CDV; B INFORMATION REQUEST AMENDMENTS 03/04/23 CDV; A ISSUE FOR OPERATIONAL WORKS APPROVAL 23/08/22 CDV (DATE: INIT:)	DRAINAGE DETAILS-FAUNA CULVERT	JOB NO: M2584E_4; PLAN: D12; ISSUE: C

JFP URBAN CONSULTANTS
BRISBANE - SUNSHINE COAST - CENTRAL QLD
BRISBANE
JFP House - 76 Ernest Street,
South Brisbane Qld 4101
P 07 3012 0100 W www.jfp.com.au
JFP URBAN CONSULTANTS PTY. LTD. A.C.N. 050 414 045
PLANNERS
URBAN DESIGNERS
SURVEYORS
ENGINEERS
LANDSCAPE ARCHITECTS

APPROVED — FOR AND ON BEHALF OF JFP URBAN CONSULTANTS PTY LTD
T.McKINNEY RPEQ 5087; A.FRASER RPEQ 5691; J.PAPPAS RPEQ 6086; S.MARSH RPEQ 8068; H.WATSON RPEQ 6200
DESIGNED CDV; DRAWN WN; CHECKED PNH; DATUM: AHD; ISSUE: DETAILS:

DFC (PROJECT MANAGEMENT) PTY LTD
'ARCHERS WAY' ESTATE - STAGE 4
AT 22-80 CASH STREET, D'AGUILAR

DENNIS FAMILY CORPORATION

MORETON BAY REGIONAL COUNCIL REF: DA/38032/2019/V3VR
FILE NAME: DRAINAGE DETAILS.DWG

COPYRIGHT © 2011 JFP URBAN CONSULTANTS PTY LTD THIS DOCUMENT MAY NOT BE COPIED OR TRANSMITTED IN ANY FORM OR BY ANY MEANS IN PART OR IN WHOLE WITHOUT THE PERMISSION OF JFP URBAN CONSULTANTS PTY LTD.

Document Set ID: 66908359
Version: 1, Version Date: 09/05/2023
Moreton Bay Regional Council
Approved subject to conditions of Decision Notice DA/2023/0531
09/05/2023

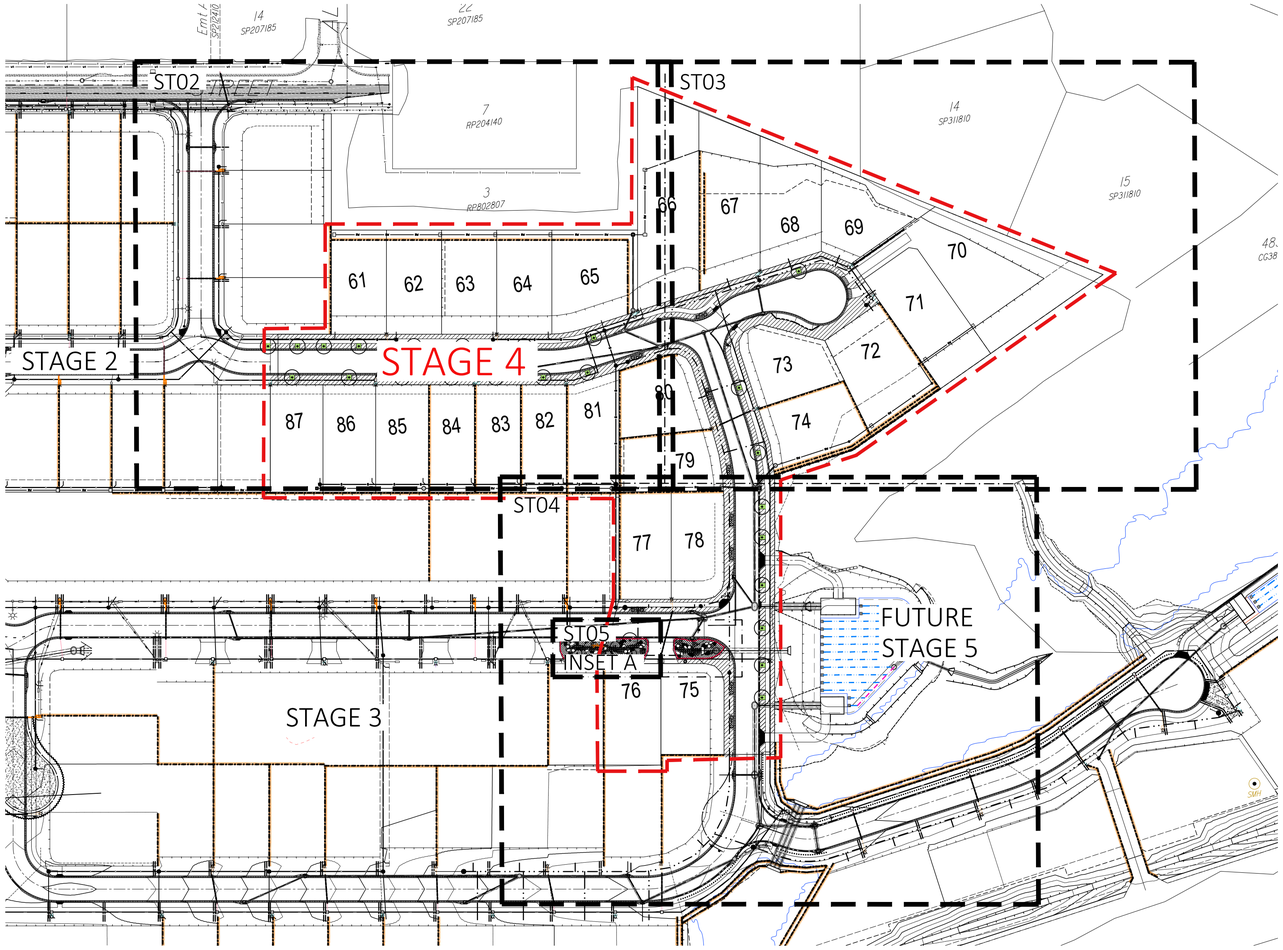

KEY PLAN

AMENDED PLAN REQUIRED

PLANT SCHEDULE - STAGE 4 STREETSCAPE

PLANTING AREA						
CODE	BOTANICAL NAME	COMMON NAME	POT SIZE	HEIGHT	SPREAD	QUANTITY
TREES						
CRY mic	*Cryptocarya microneura*	Murrogun	25L	1200mm	600mm	1
ELA obo	*Elaeocarpus obovatus*	Quandong	45L	1800mm	1200mm	18
LOP sua	*Lophostemon suaveolens*	Swamp Box	25L	1200mm	600mm	10
SHRUBS						
BAN spi	*Banksia spinulosa*	Hairpin banksia	300mm	1000mm	450mm	9
CAL 'LJ'	*Callistemon 'Little John'*	Weeping bottlebrush	300mm	1000mm	500mm	11
HOV acu	*Hovea acutifolia*	Purple Bush Pea	200mm	500mm	300mm	10
LEP pol	*Leptospermum polygalifolium*	Yellow Tea tree	200mm	1000mm	500mm	4
WES fru	*Westringia fruticosa*	Coastal Rosemary	300mm	1000mm	500mm	18
GROUNDCOVERS						
CAR app	*Carex appressa*	Tall Sedge	tube	200mm	200mm	42
CHR api	*Chrysocephalum apiculatum*	Yellow buttons	140mm	300mm	200mm	72
CYM ref	*Cymbopogon refractus*	Barbed Wire Grass	tube	200mm	200mm	33
ENT str	*Entolasia stricta*	Wiry Panic	140mm	300mm	200mm	60
GOO rot	*Goodenia rotundifolia*	Star Goodenia	tube	200mm	200mm	16
LEP lat	*Lepidosperma laterale*	Variable Swordsedge	tube	200mm	200mm	10
LOM con	*Lomandra confertifolia*	Mat rush 'Little Con'	140mm	300mm	200mm	23
LOM cra	*Lomandra 'Crackerjack'*	Crackerjack	200mm	450mm	350mm	168
LOM hys	*Lomandra hystrix*	Green Mat Rush	140mm	300mm	200mm	8
LOM lon	*Lomandra longifolia*	Spiny-head mat rush	140mm	300mm	200mm	6
LOM mul	*Lomandra multiflora*	Many Flowered mat rush	140mm	300mm	200mm	38
THE tri	*Themeda triandra*	Kangaroo Grass	tube	200mm	200mm	46
TOTAL PLANTS						**603**

All trees to be certified as AS2303:2018 compliant. The Landscape Contractor takes responsibility for tree selection. Refer any issues regarding Nat Spec compliance to the Landscape Architect.

22-80 CASH STREET, D'AGUILAR - STAGE 4

LANDSCAPE ARCHITECTURE - ECOLOGY - ARBORICULTURE

JFUP URBAN CONSULTANTS

BRISBANE 61 7 3012 0100 - SUNSHINE COAST - CENTRAL QLD

APPROVAL ISSUE

LEGEND

- NEW TREE PLANTING — REFER PLANT SCHEDULE
- FEATURE TREE PLANTING — M2 — 4 x "LOM cra" PLANTED AROUND TRUNK — REFER PLANT SCHEDULE
- SHRUBS AND FEATURE PLANTING — REFER TO SCHEDULE
- M1 — MOWING EDGE - TYPE 1 — TIMBER — REFER TO SCHEDULE
- M2 — MOWING EDGE - TYPE 2 — SPADE CUT EDGE — REFER TO SCHEDULE
- M3 — MOW EDGE 3 — CONCRETE — REFER SCHEDULE
- TU — TURF - TO STREETSCAPE — REFER SCHEDULE
- GR — GRAVEL (DECORATIVE) — REFER SCHEDULE
- PA — PLANTING AREA — AMENITY PLANTING — REFER PLANT SCHEDULE
- B1 — HARDWOOD BOLLARD — REFER SCHEDULE
- MULCH ONLY — REFER SCHEDULE
- MO — FILL MOUND — REFER SCHEDULE
- BOULDER PLACEMENT — REFER TO SCHEDULE
- BOULDER PLACEMENT — REFER TO SCHEDULE
- TPF2 — TREE PROTECTION FENCE — TYPE 2 - ORANGE FENCING — REFER TO VM DETAILS

ISSUE	DETAILS	DATE	DES	DC	QA
A	OPW LODGEMENT	2022-08-29	HQ	WA	WA

PROJECT TITLE

PROPOSED SUBDIVISION DEVELOPMENT
22-80 CASH ST & 1901 D'AGUILAR HWY, D'AGUILAR

CLIENT

DFC (Project Management) PTY LTD

COPYRIGHT © 2019 JFP URBAN CONSULTANTS PTY LTD. THIS DOCUMENT MAY NOT BE COPIED OR TRANSMITTED IN ANY FORM OR BY ANY MEANS IN PART OR IN WHOLE WITHOUT THE WRITTEN CONSENT OF JFP URBAN CONSULTANTS PTY LTD.

PLAN TITLE

STAGE 4
STREETSCAPE PLAN
COVERSHEET

DOCUMENT NUMBER
JOB NUMBER AREA STAGE PLAN ISSUE
M2584L A1_DA1_4 ST 01 A

Document Set ID: 66818659
Version: 1, Version Date: 08/08/2023

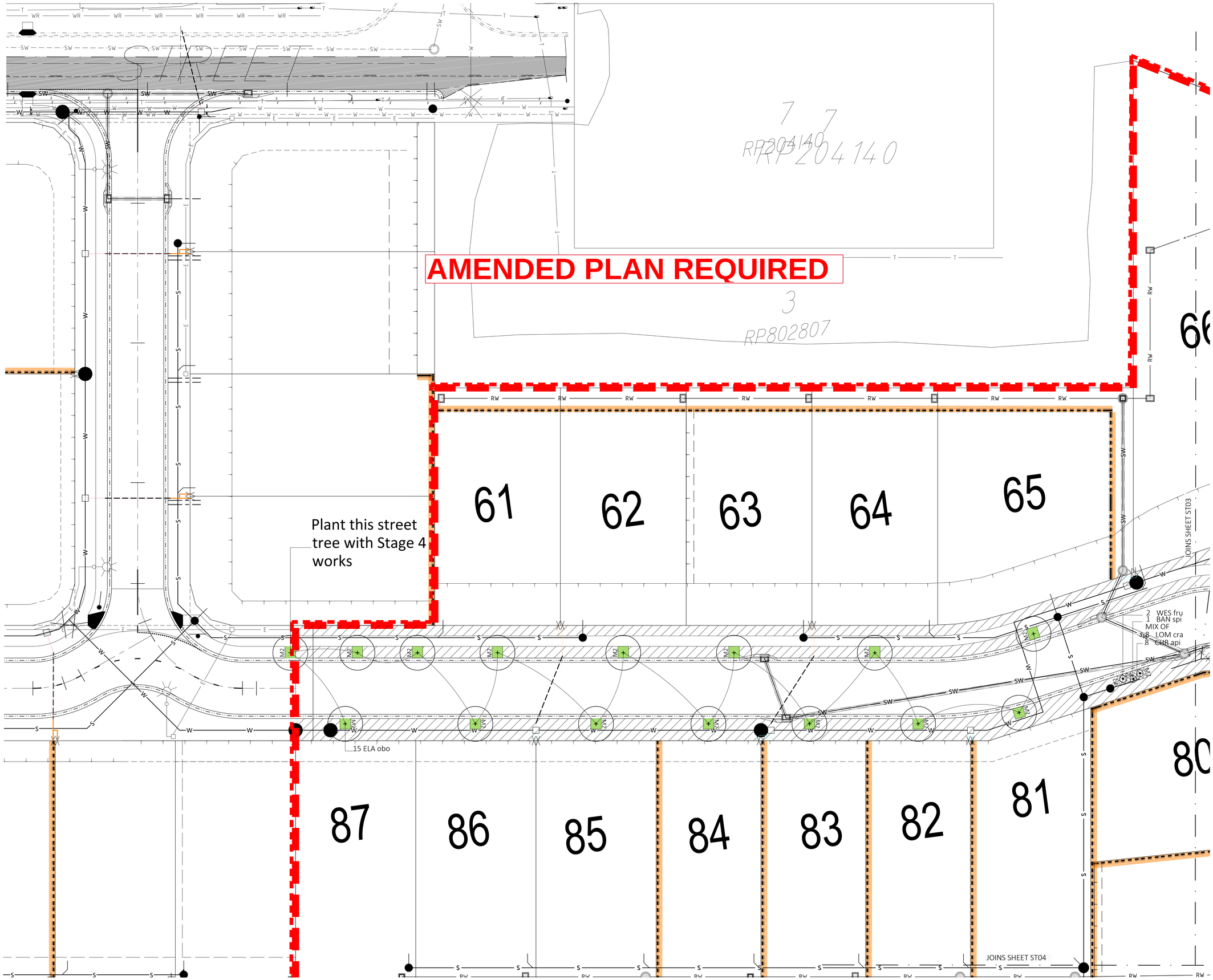

LANDSCAPE ARCHITECTURE - ECOLOGY - ARBORICULTURE

JFP URBAN CONSULTANTS

BRISBANE 61 7 3012 0100 - SUNSHINE COAST - CENTRAL QLD

APPROVAL ISSUE

LEGEND

- NEW TREE PLANTING — REFER PLANT SCHEDULE
- M2 — FEATURE TREE PLANTING — 4 x "LOM cra" PLANTED AROUND TRUNK — REFER PLANT SCHEDULE
- SHRUBS AND FEATURE PLANTING — REFER TO SCHEDULE
- M1 — MOWING EDGE - TYPE 1 — TIMBER — REFER TO SCHEDULE
- M2 — MOWING EDGE - TYPE 2 — SPADE CUT EDGE — REFER TO SCHEDULE
- M3 — MOW EDGE 3 — CONCRETE — REFER SCHEDULE
- TU — TURF - TO STREETSCAPE — REFER SCHEDULE
- GR — GRAVEL (DECORATIVE) — REFER SCHEDULE
- PA — PLANTING AREA — AMENITY PLANTING — REFER PLANT SCHEDULE
- B1 — HARDWOOD BOLLARD — REFER SCHEDULE
- MULCH ONLY — REFER SCHEDULE
- MO — FILL MOUND — REFER SCHEDULE
- BOULDER PLACEMENT — REFER TO SCHEDULE
- BOULDER PLACEMENT — REFER TO SCHEDULE
- TPF2 — TREE PROTECTION FENCE — TYPE 2 - ORANGE FENCING — REFER TO VM DETAILS

ISSUE	DETAILS	DATE	DES	DC	QA
A	OPW LODGEMENT	2022-08-29	HQ	WA	WA

PROJECT TITLE

PROPOSED SUBDIVISION DEVELOPMENT
22-80 CASH ST & 1901 D'AGUILAR HWY, D'AGUILAR

CLIENT

DFC (Project Management) PTY LTD

COPYRIGHT © 2019 JFP URBAN CONSULTANTS PTY LTD. THIS DOCUMENT MAY NOT BE COPIED OR TRANSMITTED IN ANY FORM OR BY ANY MEANS IN PART OR IN WHOLE WITHOUT THE WRITTEN CONSENT OF JFP URBAN CONSULTANTS PTY LTD.

PLAN TITLE

STAGE 4
STREETSCAPE PLAN

SCALE: 1:250 @ A1

DOCUMENT NUMBER

JOB NUMBER	AREA	STAGE	PLAN	ISSUE
M2584L	A1_DA1_4	ST 02		A

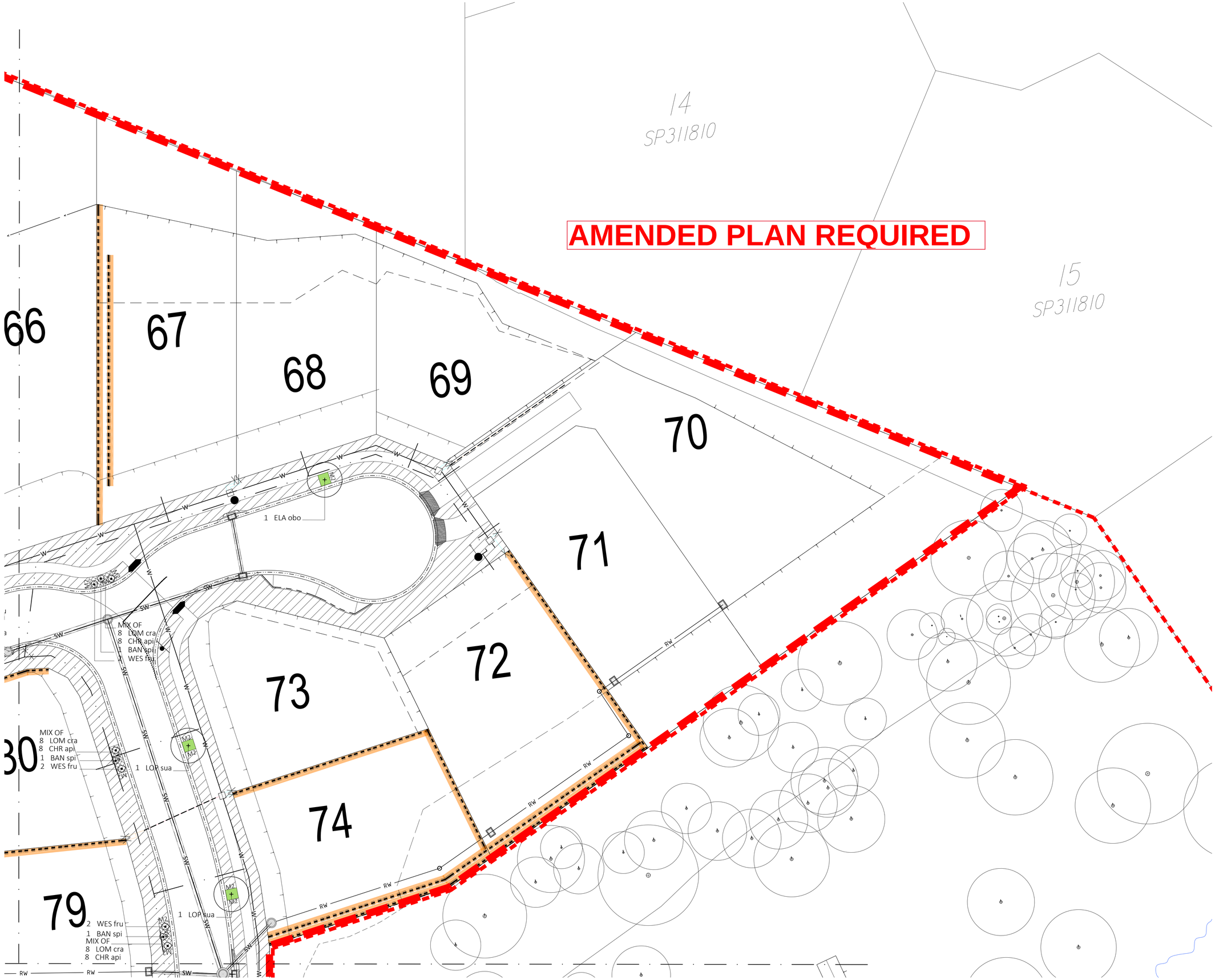

LANDSCAPE ARCHITECTURE - ECOLOGY - ARBORICULTURE

JFUP URBAN CONSULTANTS

BRISBANE 61 7 3012 0100 - SUNSHINE COAST - CENTRAL QLD

APPROVAL ISSUE

LEGEND

- NEW TREE PLANTING — REFER PLANT SCHEDULE
- FEATURE TREE PLANTING — 4 x "LOM cra" PLANTED AROUND TRUNK — REFER PLANT SCHEDULE
- SHRUBS AND FEATURE PLANTING — REFER TO SCHEDULE
- M1 MOWING EDGE - TYPE 1 — TIMBER — REFER TO SCHEDULE
- M2 MOWING EDGE - TYPE 2 — SPADE CUT EDGE — REFER TO SCHEDULE
- M3 MOW EDGE 3 — CONCRETE — REFER SCHEDULE
- TU TURF - TO STREETSCAPE — REFER SCHEDULE
- GR GRAVEL (DECORATIVE) — REFER SCHEDULE
- PA PLANTING AREA — AMENITY PLANTING — REFER PLANT SCHEDULE
- B1 HARDWOOD BOLLARD — REFER SCHEDULE
- MULCH ONLY — REFER SCHEDULE
- MO FILL MOUND — REFER SCHEDULE
- BOULDER PLACEMENT — REFER TO SCHEDULE
- BOULDER PLACEMENT — REFER TO SCHEDULE
- TPF2 TREE PROTECTION FENCE — TYPE 2 - ORANGE FENCING — REFER TO VM DETAILS

ISSUE	DETAILS	DATE	DES	DC	QA
A	OPW LODGEMENT	2022-08-29	HQ	WA	WA

PROJECT TITLE

PROPOSED SUBDIVISION DEVELOPMENT
22-80 CASH ST & 1901 D'AGUILAR HWY, D'AGUILAR

CLIENT

DFC (Project Management) PTY LTD

COPYRIGHT © 2019 JFP URBAN CONSULTANTS PTY LTD. THIS DOCUMENT MAY NOT BE COPIED OR TRANSMITTED IN ANY FORM OR BY ANY MEANS, IN PART OR IN WHOLE WITHOUT THE WRITTEN CONSENT OF JFP URBAN CONSULTANTS PTY LTD.

PLAN TITLE

STAGE 4
STREETSCAPE PLAN

SCALE: 1:250 @ A1

DOCUMENT NUMBER

JOB NUMBER	AREA	STAGE	PLAN	ISSUE
M2584L	A1_DA1_4	ST 03		A

Document Set ID: 66~~48869~~
Version: 1, Version Date: ~~08~~/08/2023

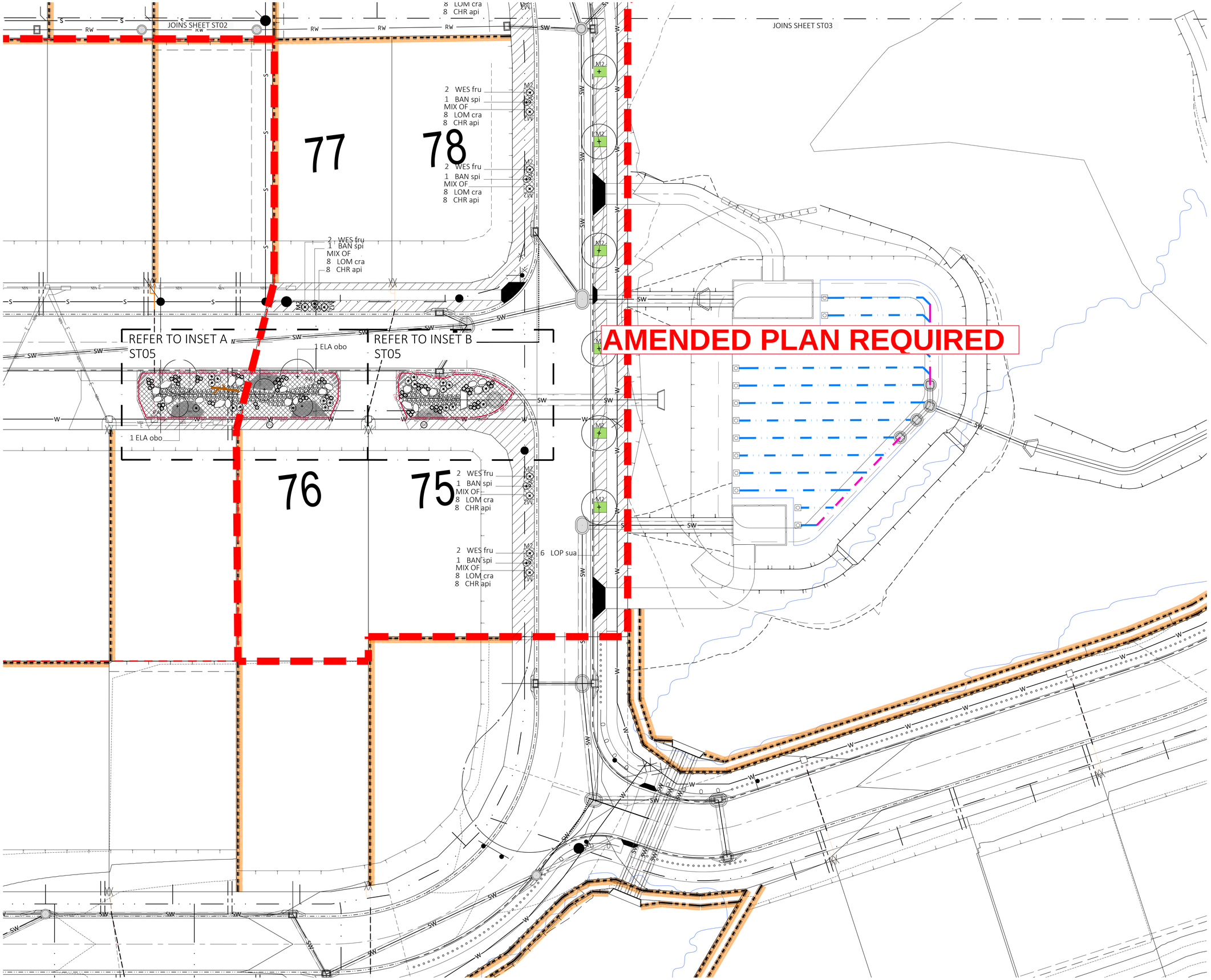

LANDSCAPE ARCHITECTURE - ECOLOGY - ARBORICULTURE

JFP URBAN CONSULTANTS

BRISBANE 61 7 3012 0100 - SUNSHINE COAST - CENTRAL QLD

APPROVAL ISSUE

LEGEND

- NEW TREE PLANTING — REFER PLANT SCHEDULE
- M2 — FEATURE TREE PLANTING — 4 x "LOM cra" PLANTED AROUND TRUNK — REFER PLANT SCHEDULE
- SHRUBS AND FEATURE PLANTING — REFER TO SCHEDULE
- M1 — MOWING EDGE - TYPE 1 — TIMBER — REFER TO SCHEDULE
- M2 — MOWING EDGE - TYPE 2 — SPADE CUT EDGE — REFER TO SCHEDULE
- M3 — MOW EDGE 3 — CONCRETE — REFER SCHEDULE
- TU — TURF - TO STREETSCAPE — REFER SCHEDULE
- GR — GRAVEL (DECORATIVE) — REFER SCHEDULE
- PA — PLANTING AREA — AMENITY PLANTING — REFER PLANT SCHEDULE
- B1 — HARDWOOD BOLLARD — REFER SCHEDULE
- MULCH ONLY — REFER SCHEDULE
- MO — FILL MOUND — REFER SCHEDULE
- BOULDER PLACEMENT — REFER TO SCHEDULE
- BOULDER PLACEMENT — REFER TO SCHEDULE
- TPF2 — TREE PROTECTION FENCE — TYPE 2 - ORANGE FENCING — REFER TO VM DETAILS

ISSUE	DETAILS	DATE	DES	DC	QA
A	OPW LODGEMENT	2022-08-29	HQ	WA	WA

PROJECT TITLE

PROPOSED SUBDIVISION DEVELOPMENT

22-80 CASH ST & 1901 D'AGUILAR HWY, D'AGUILAR

CLIENT

DFC (Project Management) PTY LTD

COPYRIGHT © 2019 JFP URBAN CONSULTANTS PTY LTD. THIS DOCUMENT MAY NOT BE COPIED OR TRANSMITTED IN ANY FORM OR BY ANY MEANS IN PART OR IN WHOLE WITHOUT THE WRITTEN CONSENT OF JFP URBAN CONSULTANTS PTY LTD.

PLAN TITLE

STAGE 4 STREETSCAPE PLAN

SCALE: 1:250 @ A1

DOCUMENT NUMBER

JOB NUMBER	AREA	STAGE	PLAN	ISSUE
M2584L	A1_DA1_4	ST 04		A

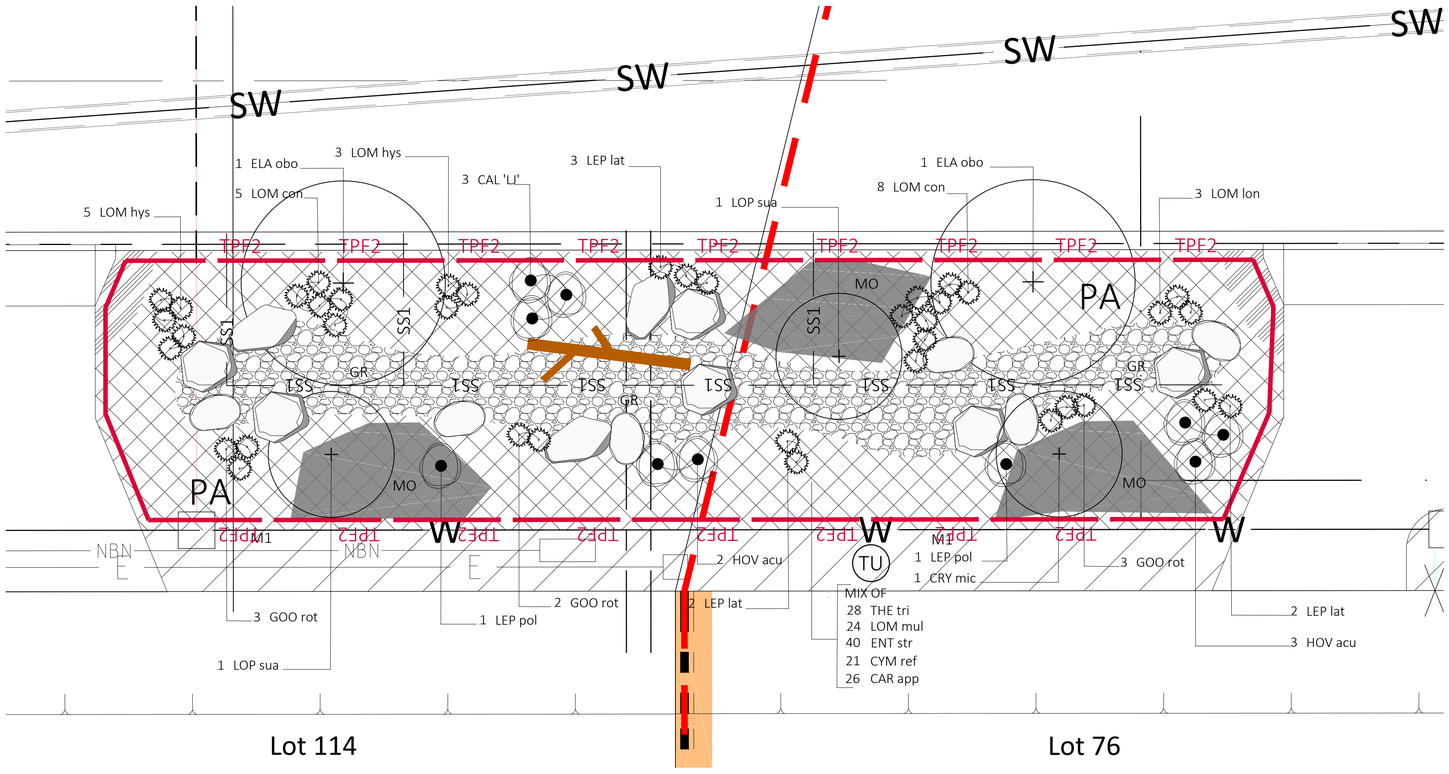

INSET A

AMENDED PLAN REQUIRED

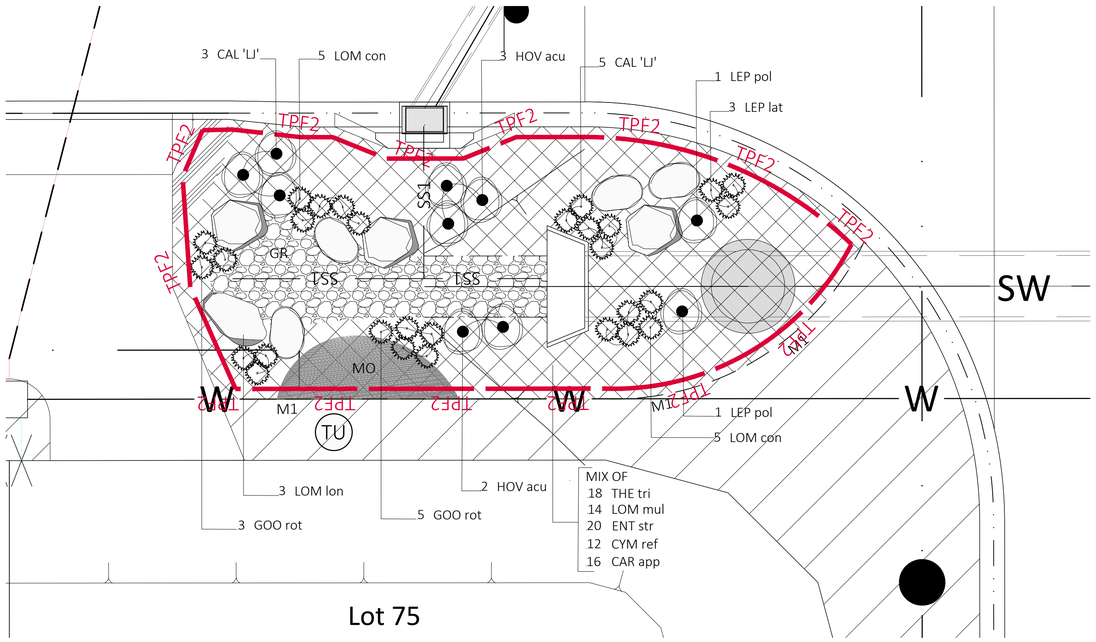

INSET B

LANDSCAPE ARCHITECTURE - ECOLOGY - ARBORICULTURE

JFP URBAN CONSULTANTS

BRISBANE 61 7 3012 0100 - SUNSHINE COAST - CENTRAL QLD

APPROVAL ISSUE

LEGEND

- NEW TREE PLANTING — REFER PLANT SCHEDULE
- M2 — FEATURE TREE PLANTING — 4 x "LOM cra" PLANTED AROUND TRUNK — REFER PLANT SCHEDULE
- SHRUBS AND FEATURE PLANTING — REFER TO SCHEDULE
- M1 — MOWING EDGE - TYPE 1 — TIMBER — REFER TO SCHEDULE
- M2 — MOWING EDGE - TYPE 2 — SPADE CUT EDGE — REFER TO SCHEDULE
- M3 — MOW EDGE 3 — CONCRETE — REFER SCHEDULE
- TU — TURF - TO STREETSCAPE — REFER SCHEDULE
- GR — GRAVEL (DECORATIVE) — REFER SCHEDULE
- PA — PLANTING AREA — AMENITY PLANTING — REFER PLANT SCHEDULE
- B1 — HARDWOOD BOLLARD — REFER SCHEDULE
- MULCH ONLY — REFER SCHEDULE
- MO — FILL MOUND — REFER SCHEDULE
- BOULDER PLACEMENT — REFER TO SCHEDULE
- BOULDER PLACEMENT — REFER TO SCHEDULE
- TPF2 — TREE PROTECTION FENCE — TYPE 2 - ORANGE FENCING — REFER TO VM DETAILS

ISSUE	DETAILS	DATE	DES	DC	QA
A	OPW LODGEMENT	2022-08-29	HQ	WA	WA

PROJECT TITLE

PROPOSED SUBDIVISION DEVELOPMENT
22-80 CASH ST & 1901 D'AGUILAR HWY, D'AGUILAR

CLIENT

DFC (Project Management) PTY LTD

COPYRIGHT © 2019 JFP URBAN CONSULTANTS PTY LTD. THIS DOCUMENT MAY NOT BE COPIED OR TRANSMITTED IN ANY FORM OR BY ANY MEANS IN PART OR IN WHOLE WITHOUT THE WRITTEN CONSENT OF JFP URBAN CONSULTANTS PTY LTD.

PLAN TITLE

STAGE 4
STREETSCAPE PLAN

SCALE: 1:250 @ A1

DOCUMENT NUMBER

JOB NUMBER	AREA	STAGE	PLAN	ISSUE
M2584L	A1_DA1_4	ST 05		A

Document Set ID: 66948669
Version: 1, Version Date: 08/08/2023

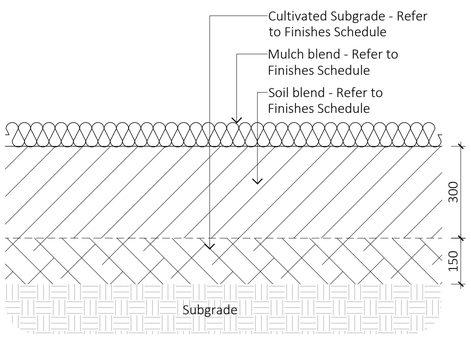

01 TYPICAL PLANTING AREA PROFILE (PA)
LD01 Scale 1:10

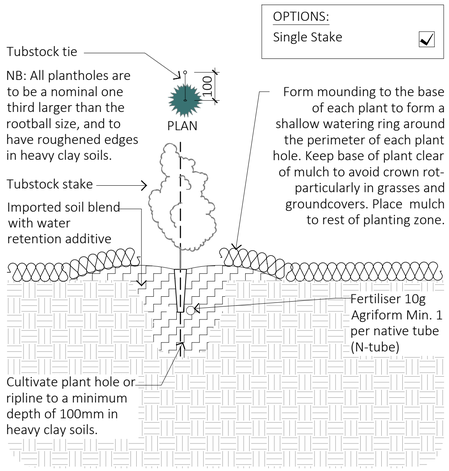

02 TUBESTOCK/RIPLINE PLANTING DETAIL
LD01 Scale 1:10

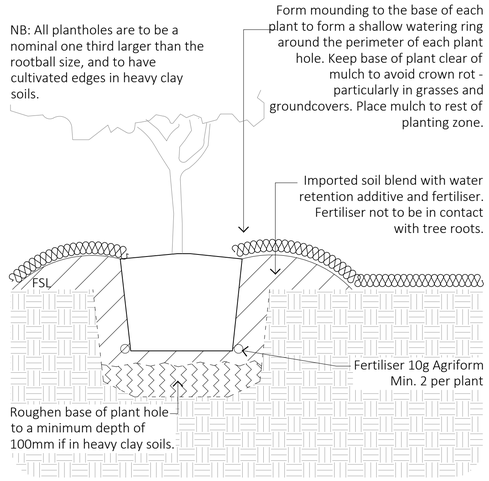

03 GENERAL PLANTING DETAIL
LD01 Scale 1:10

AMENDED PLAN REQUIRED

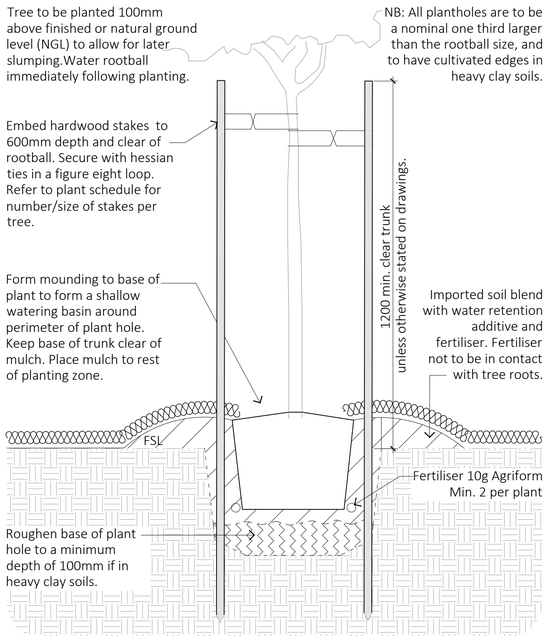

04 ADVANCED TREE PLANTING - 45 TO 200L BAGS
LD01 Scale 1:10

LANDSCAPE ARCHITECTURE - ECOLOGY - ARBORICULTURE

JFP URBAN CONSULTANTS

BRISBANE 61 7 3012 0100 - SUNSHINE COAST - CENTRAL QLD

APPROVAL ISSUE

ISSUE	DETAILS	DATE	DES	DC	QA
A	OPW LODGEMENT	2022-08-29	HQ	WA	WA

PROJECT TITLE

PROPOSED SUBDIVISION DEVELOPMENT
22-80 CASH ST & 1901 D'AGUILAR HWY, D'AGUILAR

CLIENT

DFC (Project Management) PTY LTD

COPYRIGHT © 2019 JFP URBAN CONSULTANTS PTY LTD. THIS DOCUMENT MAY NOT BE COPIED OR TRANSMITTED IN ANY FORM OR BY ANY MEANS IN PART OR IN WHOLE WITHOUT THE WRITTEN CONSENT OF JFP URBAN CONSULTANTS PTY LTD.

PLAN TITLE

STAGE 4
LANDSCAPE DETAILS

SCALE: AS SHOWN @ A1

DOCUMENT NUMBER

JOB NUMBER	AREA	STAGE	PLAN	ISSUE
M2584L	A1_DA1_4		LD 01	A

Document Set ID: 66~~18669~~
Version: 1, Version Date: 08/08/2023

LANDSCAPE ARCHITECTURE - ECOLOGY - ARBORICULTURE

JFP URBAN CONSULTANTS

BRISBANE 61 7 3012 0100 - SUNSHINE COAST - CENTRAL QLD

APPROVAL ISSUE

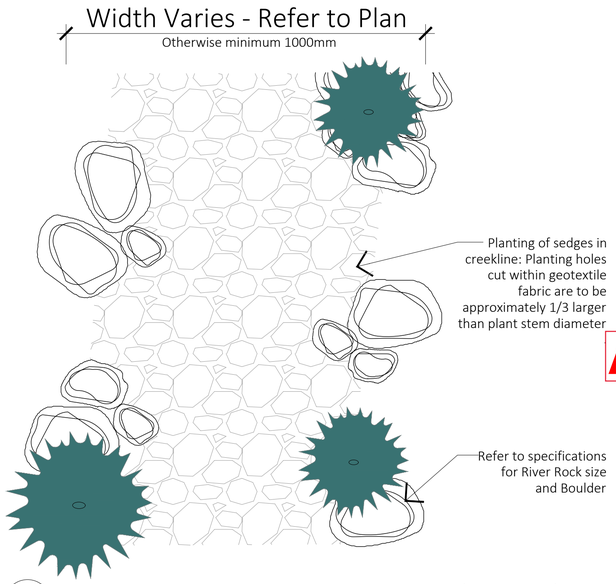

01 LD02 RANDOM BOULDER PLACEMENT IN DRY CREEK BED (PLAN VIEW)
Scale 1:10

AMENDED PLAN REQUIRED

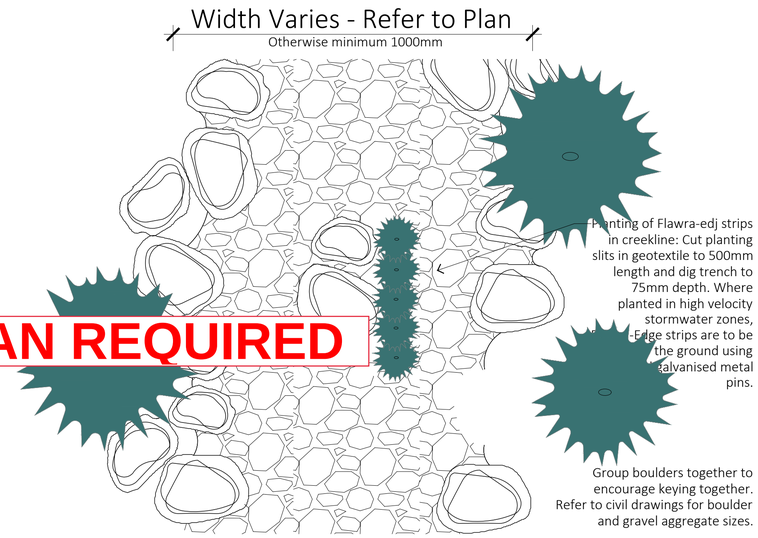

02 LD02 TYPICAL FLAWRA-EDJ PLANTING IN DRY CREEK BED (PLAN VIEW)
Scale 1:10

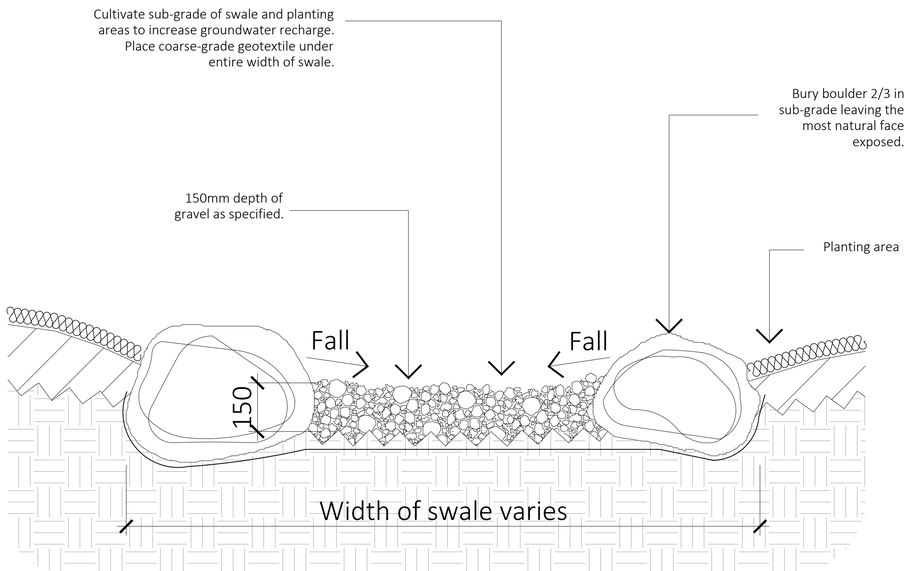

03 LD02 TYPICAL DRY CREEK BED
Scale 1:20

ISSUE	DETAILS	DATE	DES	DC	QA
A	OPW LODGEMENT	2022-08-29	HQ	WA	WA

PROJECT TITLE

PROPOSED SUBDIVISION DEVELOPMENT
22-80 CASH ST & 1901 D'AGUILAR HWY, D'AGUILAR

CLIENT

DFC (Project Management) PTY LTD

COPYRIGHT © 2019 JFP URBAN CONSULTANTS PTY LTD. THIS DOCUMENT MAY NOT BE COPIED OR TRANSMITTED IN ANY FORM OR BY ANY MEANS IN PART OR IN WHOLE WITHOUT THE WRITTEN CONSENT OF JFP URBAN CONSULTANTS PTY LTD.

PLAN TITLE

STAGE 4
LANDSCAPE DETAILS

SCALE: AS SHOWN @ A1

DOCUMENT NUMBER

JOB NUMBER	AREA	STAGE	PLAN	ISSUE
M2584L	A1_DA1_4		LD 02	A

Document Set ID: 66948669
Version: 1, Version Date: 08/08/2023

NOTES
1. Embed timber stakes a min. of 300mm into solid natural ground and so that the top of the timber edge is flush with the level of adjacent mowed grass or other surface treatment.
2. Refer to schedule for edge size.
3. For sleeper edges use min. 600mm star pickets in lieu of timber stakes.

STAKE SIZE:	
50 x 50 x 450	☑
600mm star picket	☐
TIMBER TYPE:	
100 x 16 - SWD	☐
100 x 25 - SWD	☑
100 x 38 - HWD	☐
200 x 50 - SWD	☐
200 x 50 - HWD	☐
100 x 50 - SWD	☐

CCA Treated H5 or better

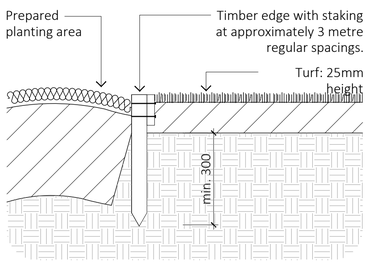

01 TIMBER GARDEN EDGING
LD03 Scale 1:10

NOTE:
Turf and mulch area to finish flush with edge.

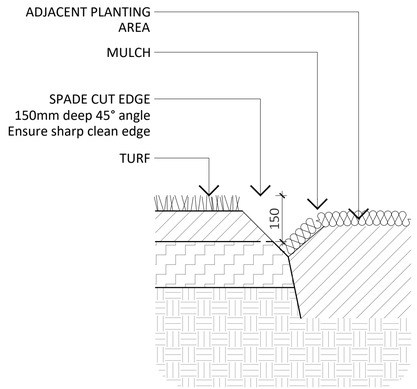

02 MOWING EDGE - SPADE CUT
LD03 Scale 1:10

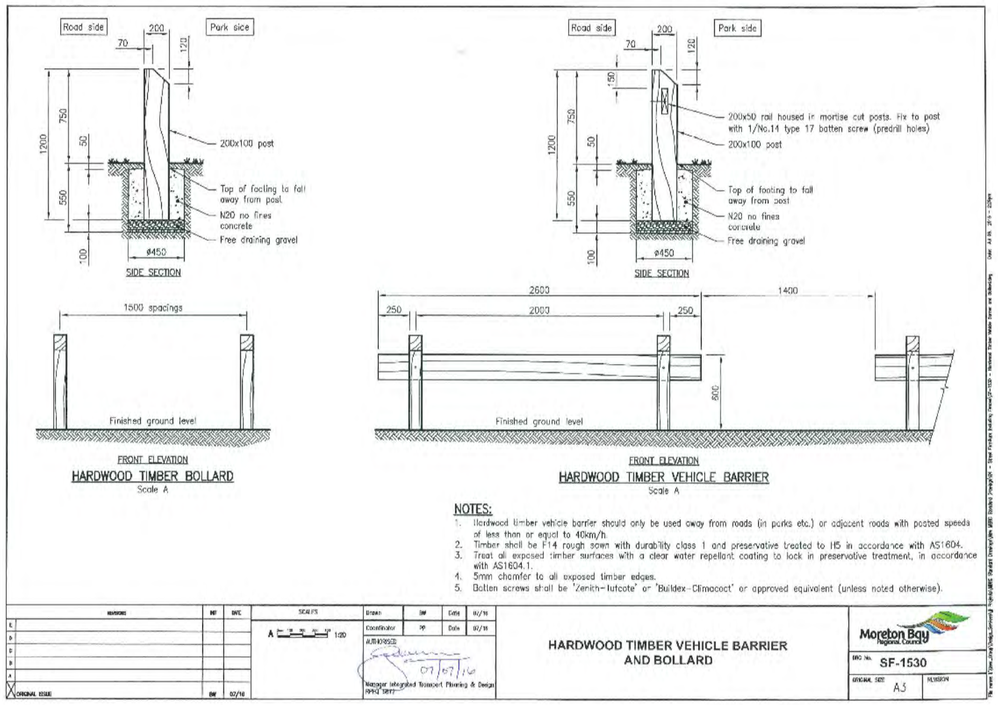

03 MBRC STANDARD DRAWING - BOLLARD
LD03 Scale 1:10

LANDSCAPE ARCHITECTURE - ECOLOGY - ARBORICULTURE

JFP URBAN CONSULTANTS

BRISBANE 61 7 3012 0100 - SUNSHINE COAST - CENTRAL QLD

APPROVAL ISSUE

AMENDED PLAN REQUIRED

ISSUE	DETAILS	DATE	DES	DC	QA
A	OPW LODGEMENT	2022-08-29	HQ	WA	WA

PROJECT TITLE

PROPOSED SUBDIVISION DEVELOPMENT
22-80 CASH ST & 1901 D'AGUILAR HWY, D'AGUILAR

CLIENT

DFC (Project Management) PTY LTD

COPYRIGHT © 2019 JFP URBAN CONSULTANTS PTY LTD. THIS DOCUMENT MAY NOT BE COPIED OR TRANSMITTED IN ANY FORM OR BY ANY MEANS IN PART OR IN WHOLE WITHOUT THE WRITTEN CONSENT OF JFP URBAN CONSULTANTS PTY LTD.

PLAN TITLE

STAGE 4
LANDSCAPE DETAILS

SCALE: AS SHOWN @ A1

DOCUMENT NUMBER

JOB NUMBER	AREA	STAGE	PLAN	ISSUE
M2584L	A1_DA1_4		LD 03	A

Document Set ID: 66948669
Version: 1, Version Date: 08/08/2023